TIB SELF-PRIMING SEWAGE PUMP

TIB-SW SERIES

- Self-priming pumps can pull fluid into the pump casing without needing to be manually primed.
  - TIB-SW (Frame-mounted pump)
  - TIB-SWZ (Close-coupled pump)

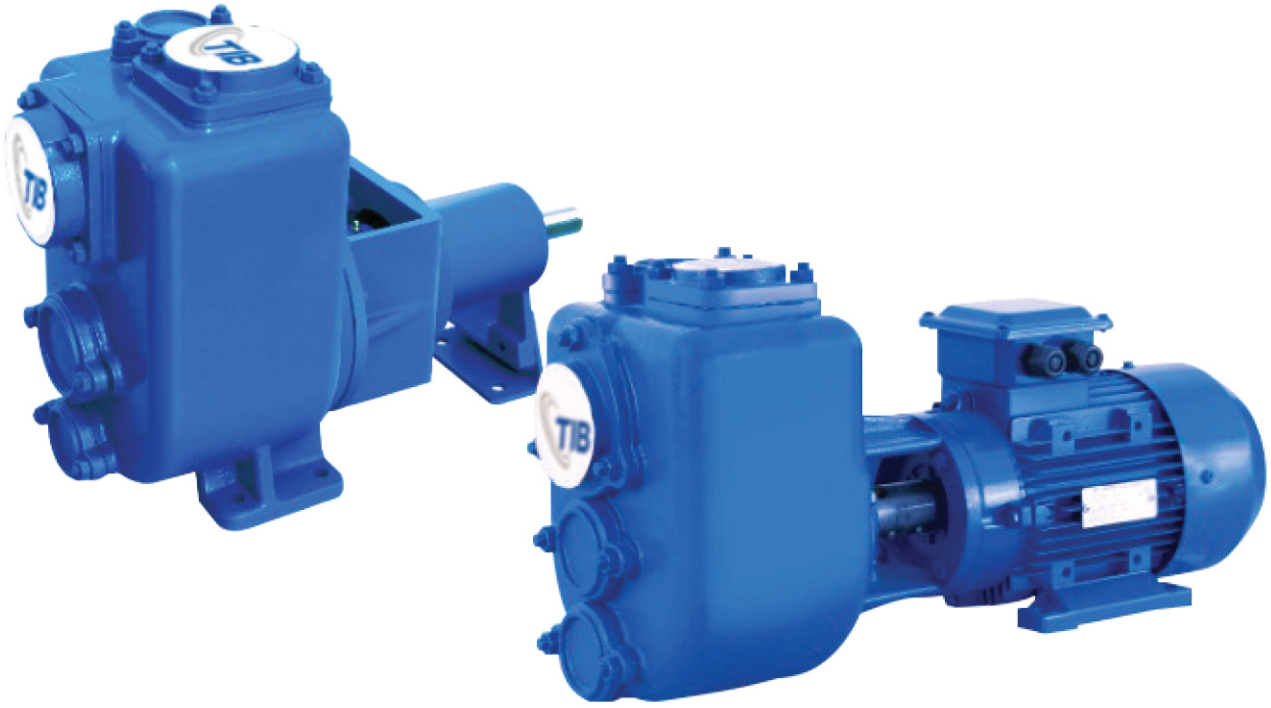

COMPLETE LIQUID PUMPING SYSTEM SOLUTIONS EXPERTISE

Our products are guaranteed to meet international quality standards.

TIB Self-priming Sewage Pump

Fully Integrated Industrial Pumping System

TIB-SW SERIES



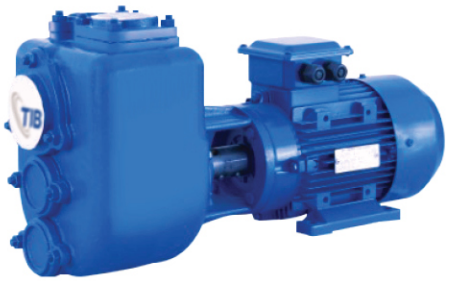

DESCRIPTION AND FEATURES

TIB-SW & TIB-SWZ series are self-priming, solid handling, resistant to abrasion. These pumps can handle liquids up to viscosity of about 50 mm^2/s. They are designed with the advanced device Maintenance Hole and Wear Plate, easy to clean and flush. TIB-SW & TIB-SWZ pumps havewide applications in industry, marine and waste treatment.

MODEL INSTRUCTION:

TIB-SW 50 - 120 X-X-X - M

- M: Mechanical Seal
- X-X-X: Casting - Impeller - Shaft Material
- 120: Impeller Norminal Diameter
- 50: Discharge Size
- TIB-SW: Series

TIB-SWZ 50 - 120 - 0220 2 X-X-X - M

- M: Mechanical Seal
- X-X-X: Casting - Impeller - Shaft Material
- 2: 2P Motor
- 0220: Motor Power 2.2 kw
- 120: Impeller Norminal Diameter
- 50: Discharge Size
- TIB-SWZ: Series

DESIGN AND STRUCTURE

Design	Performance and Dimensions referring to the European standard
Structure	Semi-open impeller, Single-Suction, Self-priming, Maintenance Hole, Wear Plate
Flange	Pump casings are casted with flanges; Screw flange for discharge size <100 mm

MATERIAL

Part	Standard Material	Options on request
Casing	Cast Iron	Ductile Iron
Impeller	Ductile Iron	Bronze / ASTM304(CF8) / ASTM316(CF8M)
Wear Plate	Cast Iron	Bronze / SUS304 / SUS316
Shaft	ASTM1045	SUS304 / SUS316 / SUS420
Shaft Seal	Mechanical Seal	-

MATERIAL CODE

C : Cast Iron
Q : Ductile Iron
B1 : Bronze
M : Mechanical Seal
S1 : SUS304
S2 : SUS316
S3 : SUS420
S4 : ASTM1045

APPLICATIONS

- Waste Water Treatment Plant
- Wasing, Cooling, Circulation
- Smoke Scrubbing
- Marine - Ballasting & Bilge
- Liquid Transfer : clean or dirty water, mixed liquids, abrasive or corrosive liquids, low viscosity of petroleum products

OPERATING DATA

Items	TIB-SW Series	TIB-SWZ Series
DN (mm)	40~200	40~100
Flow Rate(Q)	4~486 m^3/h	4~145 m^3/h
Head(H)	4~55 m	4~40 m
Max Solids Size	76 mm	50 mm
Self-priming Head	3~7 m	
Speed	1450~3600 rpm; lower speed on request	
Max Tempurature	80°C	
Conveying Medium	Neutral, acid or alkali clean or dirty liquids, containing sand, mud or solids in suspension	

Thai Industrial Business Company Limited
Tel. : +66 (0) 65 265 4555 (Hotline) , +66 (0) 2 180 6456
E-mail : sales@tibflow.com

Copyright © Thai Industrial Business Co.,Ltd. All rights reserved.

TIB-SW/TIB-SWZ SERIES PERFORMANCE

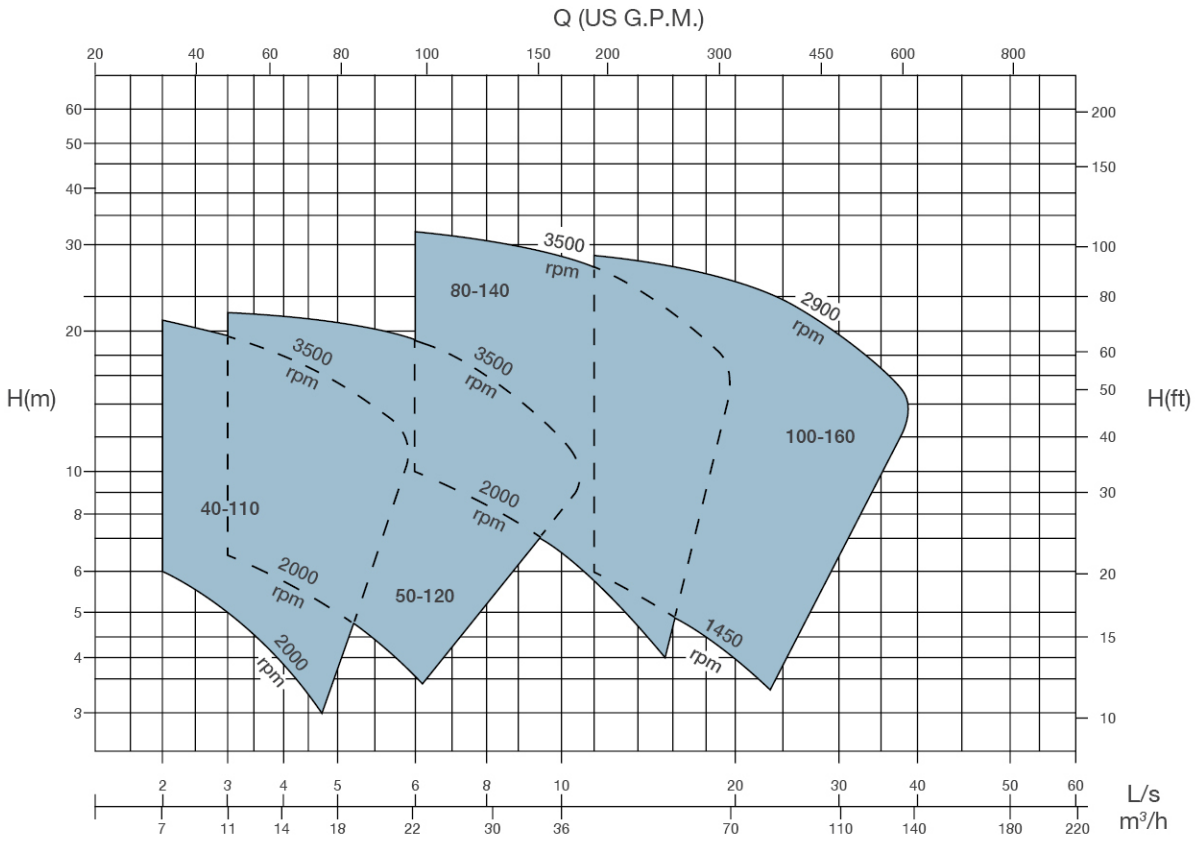

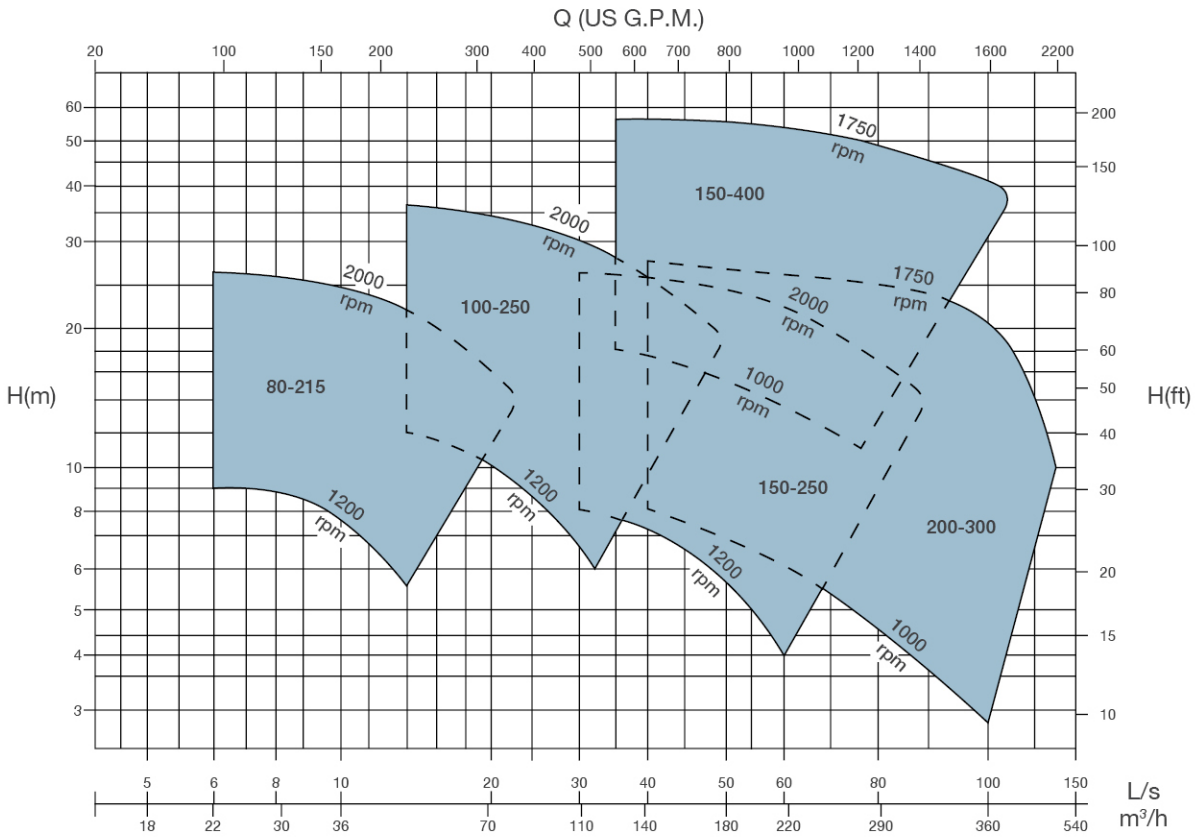

Thai Industrial Business Company Limited
Tel. : +66 (0) 65 265 4555 (Hotline) , +66 (0) 2 180 6456
E-mail : sales@tibflow.com

Copyright © Thai Industrial Business Co.,Ltd. All rights reserved.

TIB-SW SERIES EXPLODE VIEW AND LIST OF PARTS

Model : TIB-SW80-215

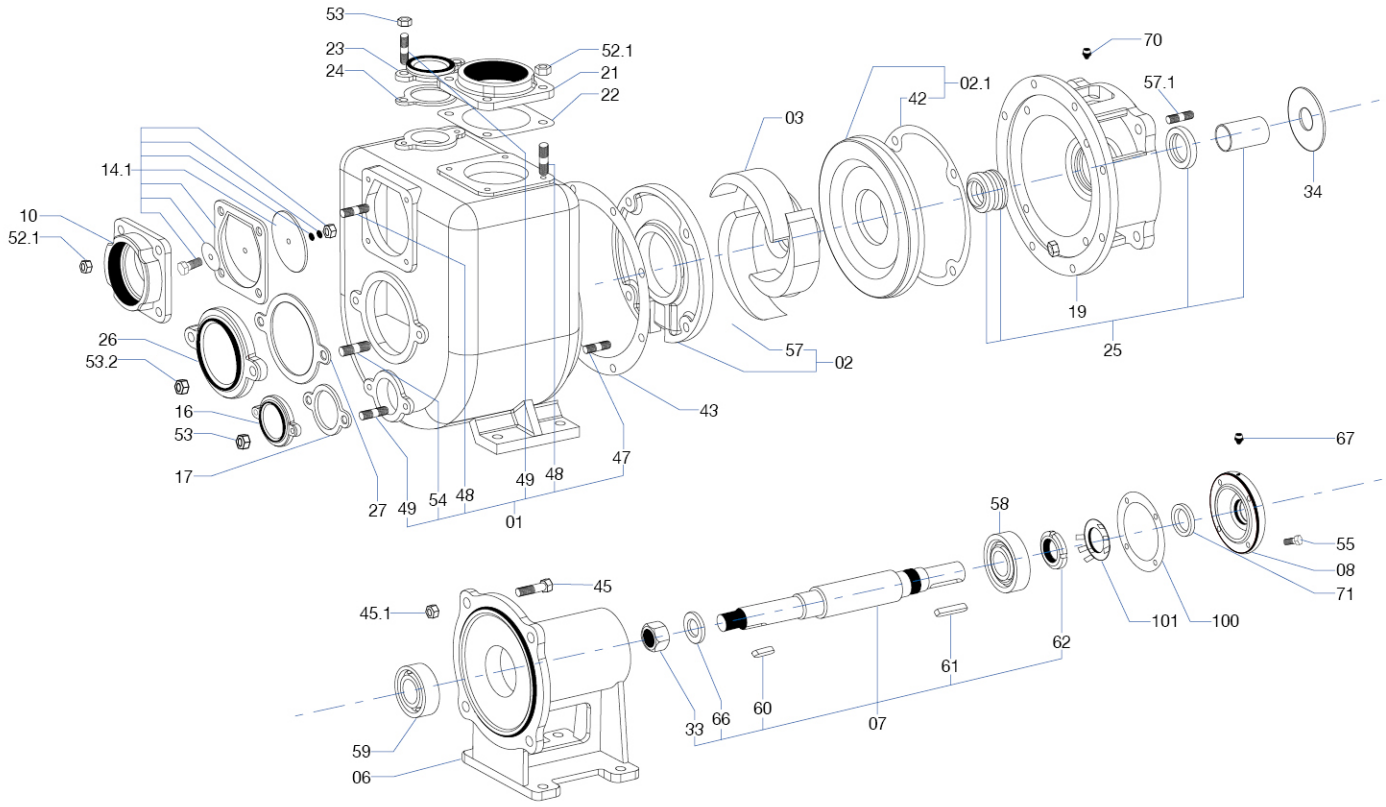

Code	Part Name
01	Casing
02	Wear Plate-Front
02.1	Wear Plate-Back
03	Impeller
06	Bearing Frame
07	Shaft
08	Bearing Cover
10	Suction Flange
14.1	Rubber Check
	Front Plate - Check Valve
	Back Plate - Check Valve
	Bolt
	Nut
16	Inspection Cover
17	Inspection Cover Gasket
19	Pump Cover
21	Discharge Flange
22	Discharge Gasket

Code	Part Name
23	Inspection Cover
24	Inspection Cover Gasket
25	Shaft Sleeve
	Oil Seal
	Mechanical Seal
26	Inspection Cover
27	Inspection Cover Gasket
33	Impeller Nut
34	Water Deflector
42	Back Wear Plate Gasket
43	Casing Gasket
45	Bolt
45.1	Nut
47	Stud
48	Stud
49	Stud
52.1	Nut
53	Nut

Code	Part Name
53.2	Nut
54	Stud
55	Bolt
57.1	Screw Bolt
58	Ball Bearing
59	Ball Bearing
60	Key (Impeller)
61	Key (Shaft)
62	Bearing Lock Nut
66	Flat Washer
67	Grease Cup
70	Grease Cup
71	Lip Seal
100	Bearing Cover Gasket
101	Bearing Lock Nut Washer

Thai Industrial Business Company Limited
Tel. : +66 (0) 65 265 4555 (Hotline) , +66 (0) 2 180 6456
E-mail : sales@tibflow.com

Copyright © Thai Industrial Business Co.,Ltd. All rights reserved.

TIB-SW SERIES INSTALLATION DIMENSIONS

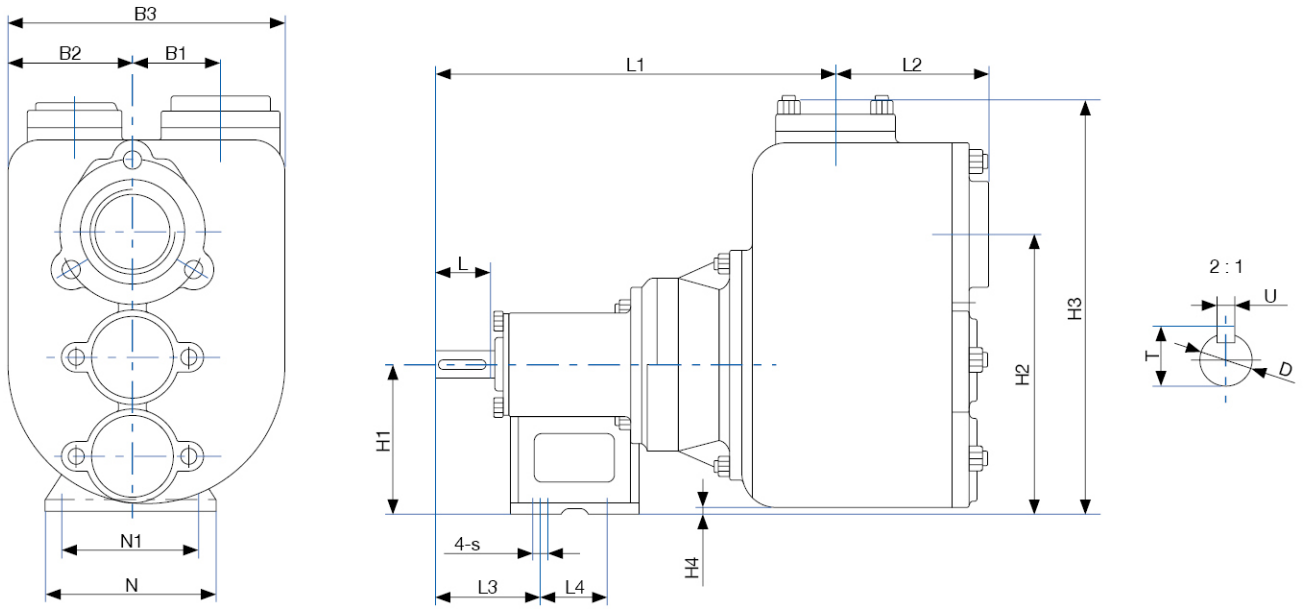

Model	Overall Dimensions					Installation Dimensions										Shaft			Weight (kg)
	B1	B2	B3	L1	L2	H1	H2	H3	H4	L	N1	N	L3	L4	s	T	U	D	
TIB-SW40-110	30	80	173	263	75	90	163	240	-5	40	80	102	70	50	ø10	21.5	6	ø19	19
TIB-SW50-120	36	94	210	300	114	110	206	306	5	41	103	128	80		ø12				31
TIB-SW100-160	37	150	300	442	180	160	341	462	10	60	150	182	110	125	ø14	31	8	ø28	130

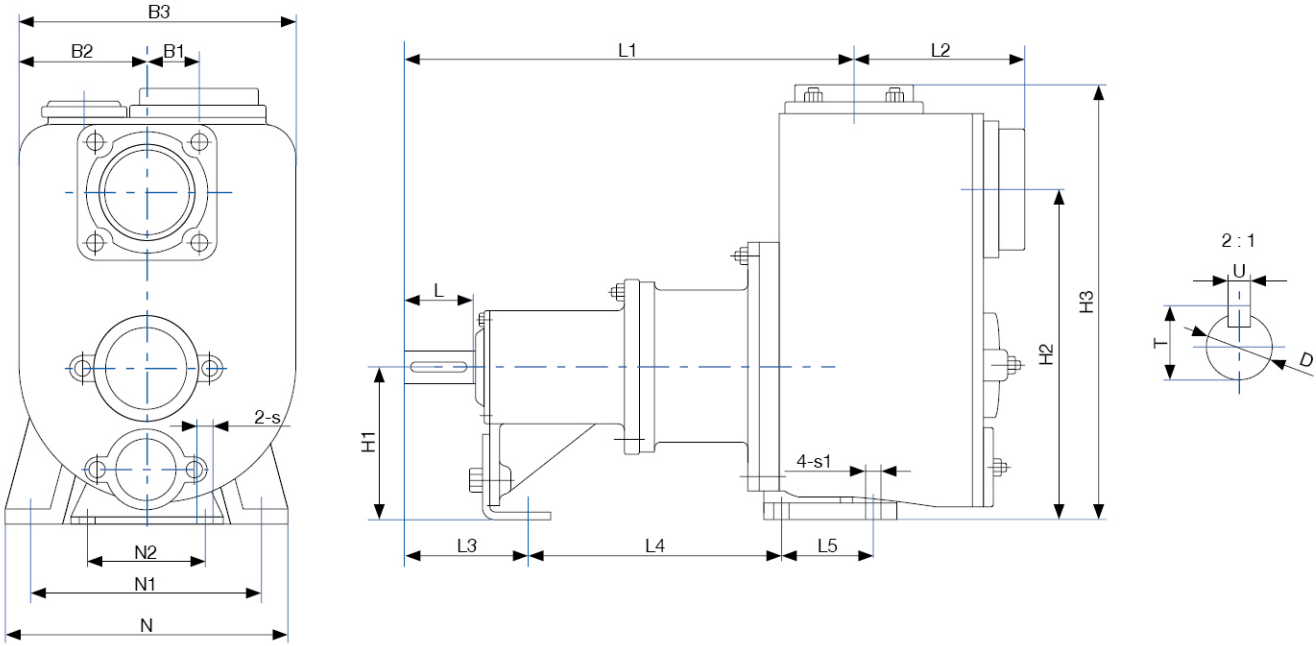

Model	Overall Dimensions					Installation Dimensions												Shaft			Weight (kg)
	B1	B2	B3	L1	L2	H1	H2	H3	N2	N1	N	L	L3	L4	L5	s1	s	T	U	D	
TIB-SW80-140	45	110	240	392	148	132	289	381	90	200	245	60	109	222	80	ø14	ø14	31	8	ø28	55
TIB-SW100-250	160	180	420	469	275	200	350	487	110	295	340	80	138	347	95		ø15	35	10	ø32	148
TIB-SW150-250	90	220	480	566	292	250	454	590		350	410			322	170	ø18					261
TIB-SW150-400	280	280	700	700	365	350	645	795	150	450	510	110	180	478	200		ø18	59	16	ø55	445
TIB-SW200-300	75	288	575	764	290	315	535	720					165	499				45	12	ø42	395

Thai Industrial Business Company Limited
Tel. : +66 (0) 65 265 4555 (Hotline) , +66 (0) 2 180 6456
E-mail : sales@tibflow.com
www.tibflow.com
Copyright © Thai Industrial Business Co.,Ltd. All rights reserved.

TIB-SW SERIES INSTALLATION DIMENSIONS

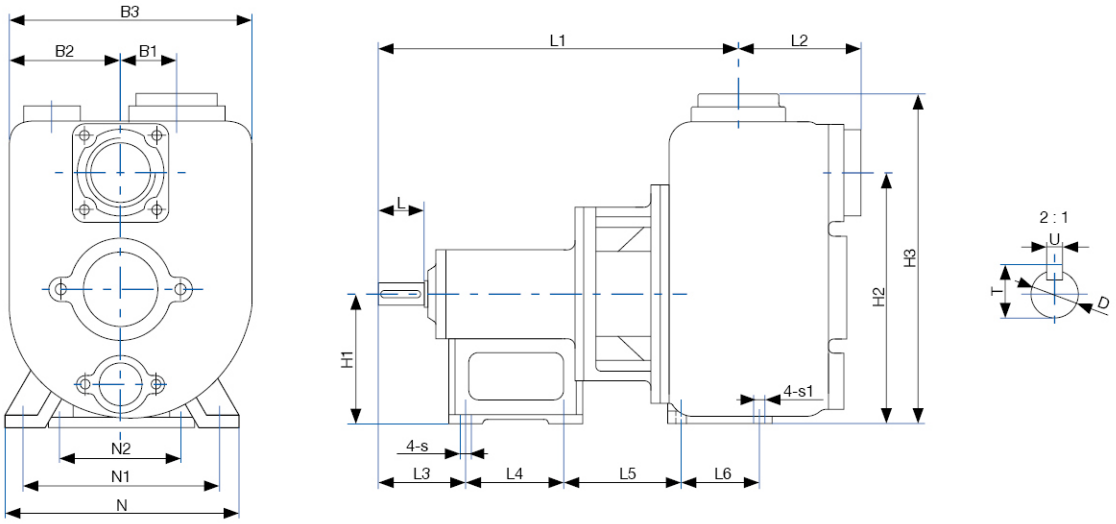

Model	Overall Dimensions					Installation Dimensions													Shaft			Weight (kg)
	B1	B2	B3	L1	L2	H1	H2	H3	N1	N2	N	L	L3	L4	L5	L6	s1	s	T	U	D	
TIB-SW80-215	70	139	303	458	155	160	310	410	150	245	290	60	110	125	150	160	ø14	ø14	31	8	ø28	75

FLANGE DIMENSIONS

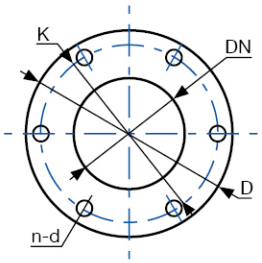

Model	Overall Dimensions				Installation Dimensions			
	DN	D	K	n-d	DN	D	K	n-d
TIB-SW40-110	RP1 1/2	-	-	-	RP1 1/2	-	-	-
TIB-SW50-120	RP2				RP2			
TIB-SW80-140	RP3				RP3			
TIB-SW80-215								
TIB-SW100-160	RP4				RP4			
TIB-SW100-250								
TIB-SW150-250	ø150	ø276	ø240	6-ø18	ø150	ø276	ø240	6-ø18
TIB-SW150-400								
TIB-SW200-300	ø200	ø320	ø280	8-ø18	ø200	ø320	ø280	8-ø18

TIB-SWZ SERIES INSTALLATION DIMENSIONS (50Hz)

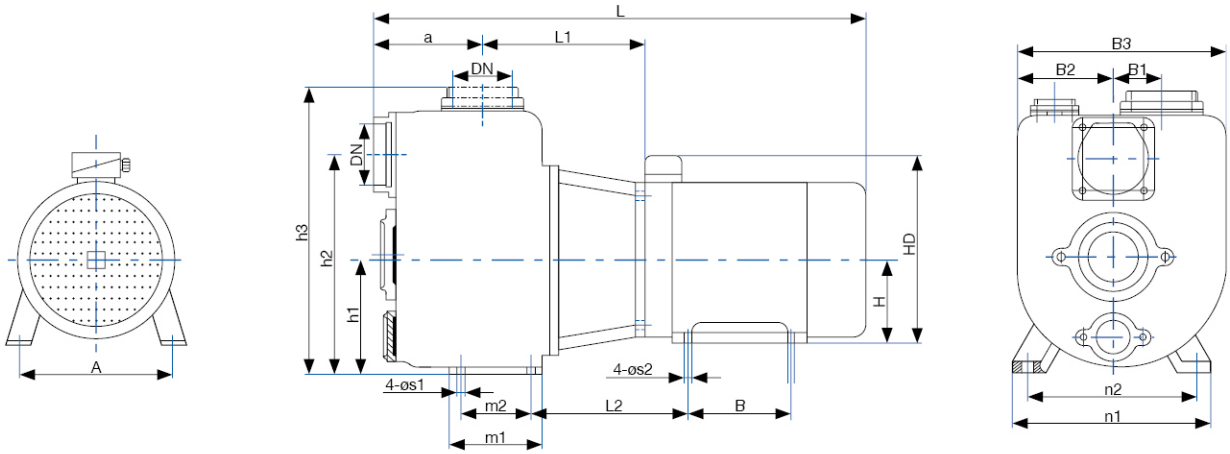

Model	Motor (B34)		Installation Dimensions (mm)																				Weight (kg)		
	Model	kw	DN	B1	B2	B3	h1	h2	h3	m1	m2	n1	n2	a	L1	s1	s2	H	HD	A	B	L2	L	Pump	Motor	Total
TIB-SWZ40-110-01102	Y2-802-2	1.1	1 1/2"	30	80	173	95	168	245	-	-	-	-	75	153.5	-	10	80	215	125	100		485	17	17	34
TIB-SWZ50-120-02202	Y2-90L-2	2.2	2"	36	94	210	105	201	321					114	185			90	235	140	125		595	27	25	52
TIB-SWZ80-140-04002	Y2-112M-2	4	3"	45	110	240	132	287	380	115	80	245	200	148	202.5	14	12	112	284	190	140	221	690	48	42	90
TIB-SWZ80-140-05502	Y2-132S1-2	5.5		45											225.5			132	324	216		253	763	50	64	114
TIB-SWZ80-215-04004	Y2-112M-4	4		70	139	303	160	310	410	133	100	290	245	156	239			112	284	190		226	735	67	46	113
TIB-SWZ100-160-15002	Y2-160M2-2	15	4"	37	150	300		341	462	-	-	-	-	180	283.5	-	15	160	406	254	210	-	969	125	107	232
TIB-SWZ250-160-07504	Y2-132M-4	7.5		160	180	420	200	350	487	145	95	340	295	275	226.5	14	12	132	324	216	178	331.5	932	135	77	212

Thai Industrial Business Company Limited
Tel. : +66 (0) 65 265 4555 (Hotline) , +66 (0) 2 180 6456
E-mail : sales@tibflow.com
www.tibflow.com
Copyright © Thai Industrial Business Co.,Ltd. All rights reserved.

TIB-SWZ SERIES EXPLODE VIEW AND LIST OF PARTS

Model : TIB-SWZ50-120-02202

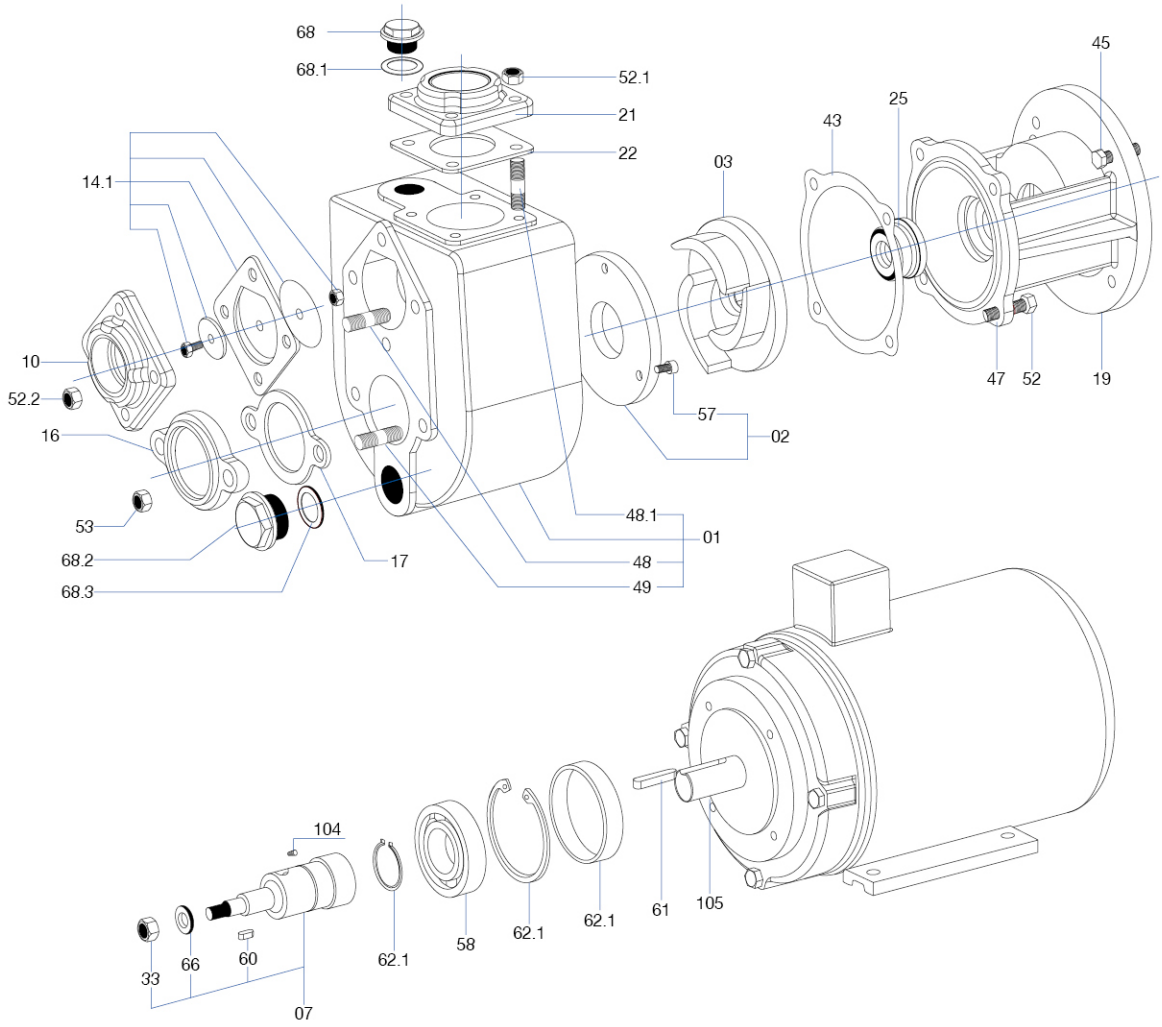

Code	Part Name
01	Casing
02	Wear Plate
03	Impeller
07	Shaft
10	Suction Flange
14.1	Rubber Check
	Check Valve Plate (Front)
	Check Valve Plate (Back)
	Screw Bolt
	Screw Nut
16	Inspection Cover
17	Inspection Cover Gasket
19	Adapter

Code	Part Name
21	Discharge Flange
22	Discharge Gasket
23	Inspection Cover
24	Inspection Cover Gasket
25	Mech. Seal
26	Inspection Cover
27	Inspection Cover Gasket
33	Impeller Nut
43	Casing Cover Gasket
45	Screw Bolt
47	Double-screw Stud
48	Double-screw Stud
48.1	Double-screw Stud
49	Double-screw Stud

Code	Part Name
52	Screw Nut
53	Screw Nut
57	Bolt & Nut
58	Ball Bearing
60	Key
61	Key
62.1	External Circlip
	Rubber Pad
	Internal Circlip
66	Flat Washer
68	Plug Screw
68.1	O-ring
68.2	Plug Screw
68.3	O-ring
104	Set Screw
105	Motor

Thai Industrial Business Company Limited
Tel. : +66 (0) 65 265 4555 (Hotline) , +66 (0) 2 180 6456
E-mail : sales@tibflow.com

Copyright © Thai Industrial Business Co.,Ltd. All rights reserved.

TIB SELF-PRIMING

SEWAGE PUMP

COMPLETE LIQUID PUMPING SYSTEM SOLUTIONS EXPERTISE

บริษัท ไทยธุรกิจอุตสาหกรรม จำกัด
THAI INDUSTRIAL BUSINESS CO., LTD.

555 อาคารรสา วัน ยูนิตเลขที่ 2203-2 ชั้นที่ 22 ถนนพหลโยธิน
แขวงจตุจักร เขตจตุจักร กรุงเทพมหานคร 10900

555 Rasa One, Unit No. 2203-2, 22 floor Phaholyothin Road,
Chatuchak, Chatuchak, Bangkok 10900 Thailand.

Tel. +66 (0) 65 265 4555 (Hotline) , +66 (0) 2 180 6456

CONTACT US

sales@tibflow.com
www.tibflow.com