TIB DOUBLE-SUCTION SPLIT CASING PUMP

TIB-GC SERIES

- The casing can have separate chambers or volutes.
  Allows easy access to the internal components of the pump.



COMPLETE LIQUID PUMPING SYSTEM SOLUTIONS EXPERTISE

Our products are guaranteed to meet international quality standards.

TIB Double-suction Split Casing Pump

Fully Integrated Industrial Pumping System

TIB-GC SERIES





DESCRIPTION AND FEATURES

TIB-GC series split casing pumps are designed with double suctions. This kind of pumps are of high flow rate, high effiency, stable operation, low noise and long service life, easy to install and maintain. Widely used in plant, mine, city water supply, irrigation, HVAC and vessel industry.

MODEL INSTRUCTION:

TIB-GC 350 - 510 X-X-X - X

- Mechanical Seal
- Casting - Impeller - Shaft Material
- Impeller Norminal Diameter
- Discharge Size
- Series

MATERIAL CODE

C : Cast Iron
Q : Ductile Iron
B : Brass
Seal Type :
M : Mechanical Seal
P : Gland Packing

S1 : SUS304
S2 : SUS316
S3 : SUS420
S4 : ASTM1045

APPLICATIONS

- HVAC and Cooling Tower
- Municipal Water Supply
- Pump Station
- Marine and Ship Building
- Power Plant/Water Plant
- Industrial water supply system
- Fire Fighting System

DESIGN AND STRUCTURE

Design	Performance referring to GB/T5657-96, Q/FZEF 001-2014 Standard
Structure	Single-Stage, Double-Suction, Splt-Casing
DN (mm)	80~400
Flange	DIN2501 PN16 GB / T17241.6 PN1.6

MATERIAL

Part	Standard Material	Options on request
Casing	Cast Iron	Ductile Iron
Impeller	Brass	Cast Iron / SUS304 / SUS316
Shaft	ASTM1045	AUS304 / SUS316 / SUS420
Shaft Seal	Mechanical Seal	Gland Packing

OPERATING DATA

Flow Rate(Q)	36~3400 m^3/h
Head(H)	8~190 m
Speed	1480 or 2980 rpm (50 Hz) / 1780 or 3580 rpm (60 Hz)
Max Tempurature	85°C(standard) ; 105°C(on request)
Working Pressure	1.6 MPa(standard) ; 2.5 MPa(on request)
Conveying Medium	Clean water or liquids similar to clean water in physical property

Thai Industrial Business Company Limited
Tel. : +66 (0) 65 265 4555 (Hotline) , +66 (0) 2 180 6456
E-mail : sales@tibflow.com

Copyright © Thai Industrial Business Co.,Ltd. All rights reserved.

TIB-GC SERIES EXPLODE VIEW AND LIST OF PARTS

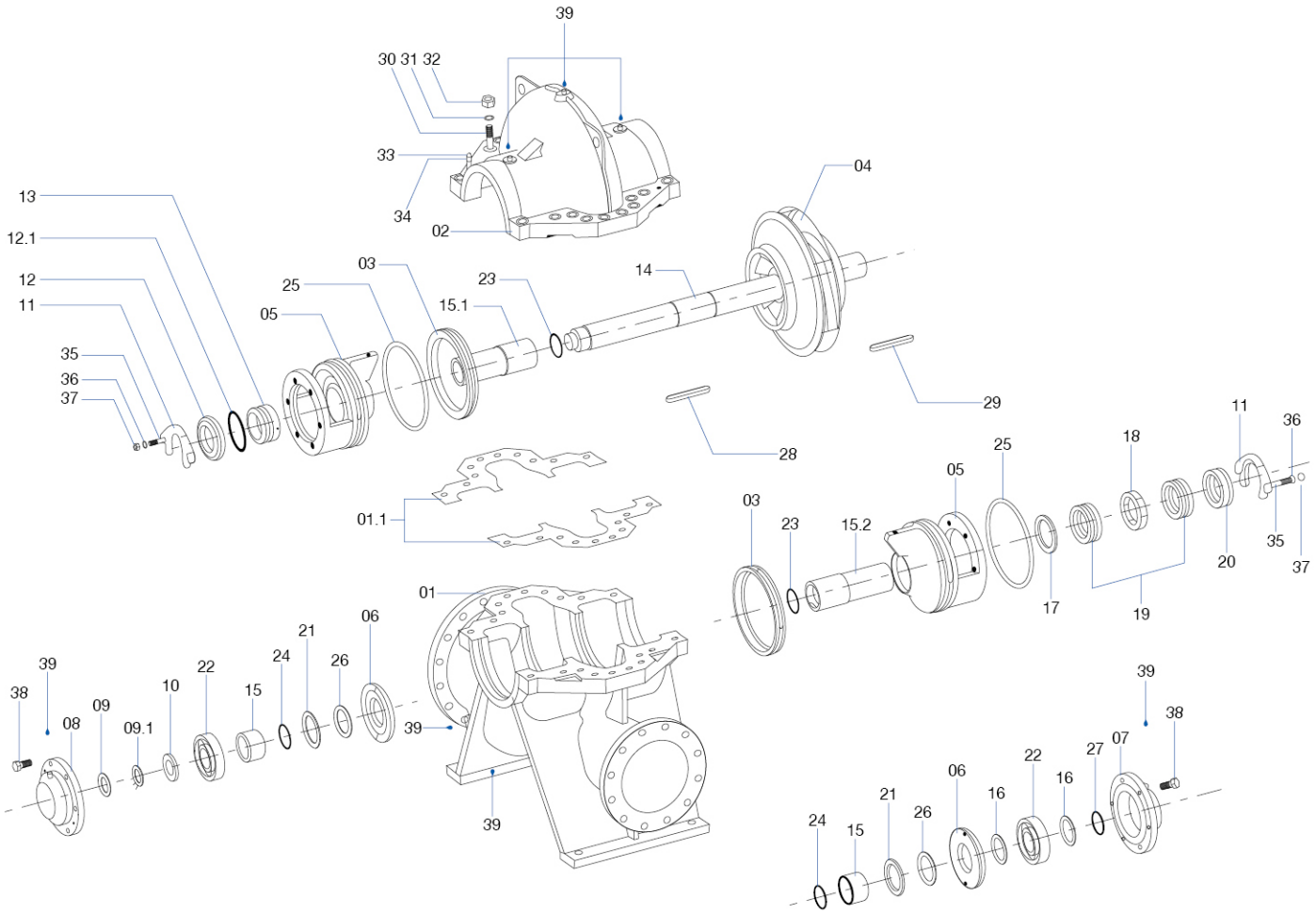

Code	Part Name
01	Casing-Bottom
01.1	Casing Gasket
02	Casing-Top
03	Wear Ring
04	Impeller
05	Seal Frame
06	Bearing Cover
07	Bearing Frame-Driving End
08	Bearing Frame-Non-driving End
09	Screw Nut
09.1	Lock Washer for Nut
10	Bearing Slinger
11	Seal Plate
12	Seal Cover
12.1	Seal Cover Gasket

Code	Part Name
13	Mech. Seal
14	Shaft
15	Shaft Sleeve-Short
15.1	Shaft Sleeve
15.2	Packing Shaft Sleeve
16	Bearing Seal Plate
17	Packing Seal Plate
18	Lantem Ring
19	Gland
20	Packing Cover
21	Slinger
22	Ball Bearing
23	O-ring
24	O-ring
25	O-ring

Code	Part Name
26	Felting
27	External Circlips
28	Key
29	Key
30	Screw Bolt
31	Spring Washer
32	Screw Nut
33	Pin
34	Screw Nut
35	Screw Bolt
36	Flat Gasket
37	Screw Nut
38	Screw Bolt
39	Plug

Thai Industrial Business Company Limited
Tel. : +66 (0) 65 265 4555 (Hotline) , +66 (0) 2 180 6456
E-mail : sales@tibflow.com

Copyright © Thai Industrial Business Co.,Ltd. All rights reserved.

TIB-GC SERIES - 50Hz PERFORMANCE

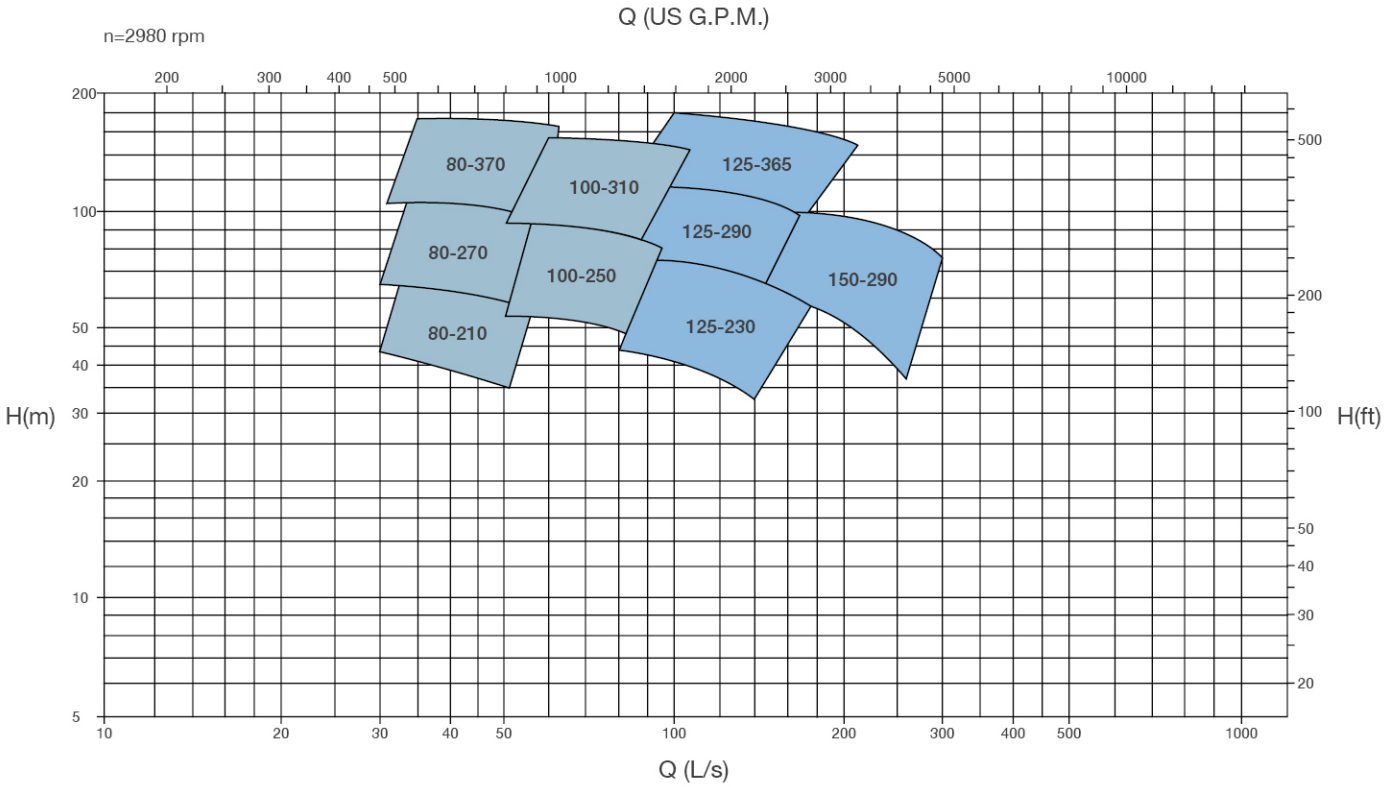

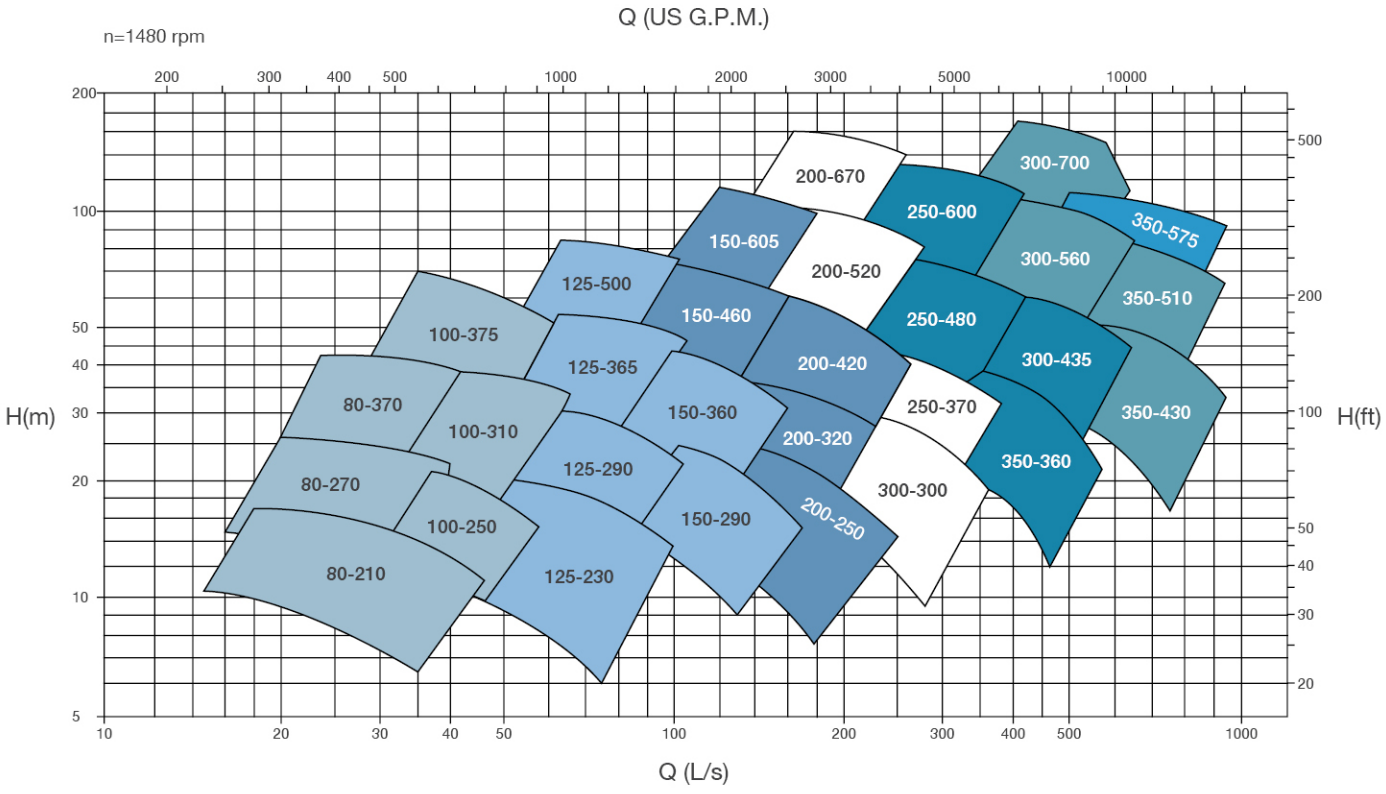

Thai Industrial Business Company Limited
Tel. : +66 (0) 65 265 4555 (Hotline) , +66 (0) 2 180 6456
E-mail : sales@tibflow.com

Copyright © Thai Industrial Business Co.,Ltd. All rights reserved.

TIB-GC SERIES - 60Hz PERFORMANCE

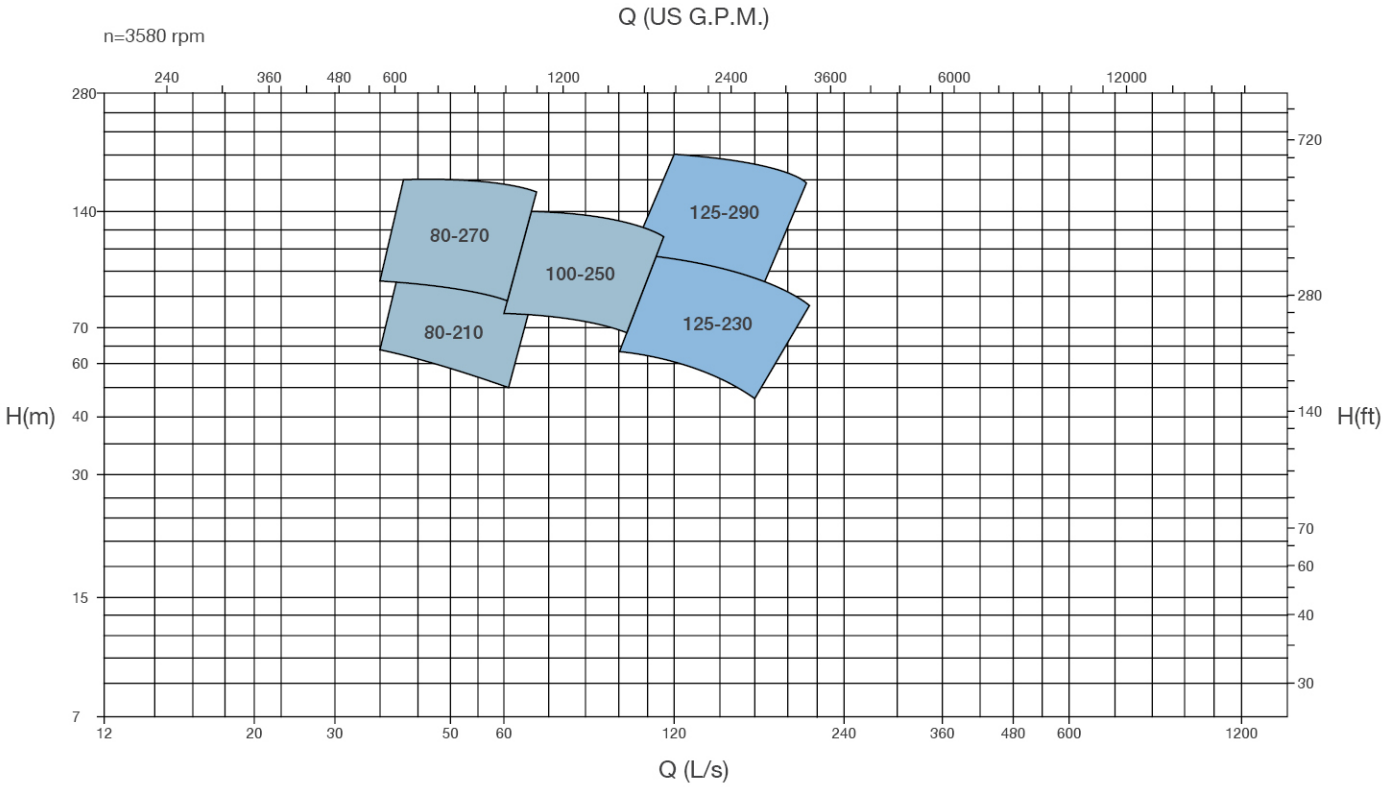

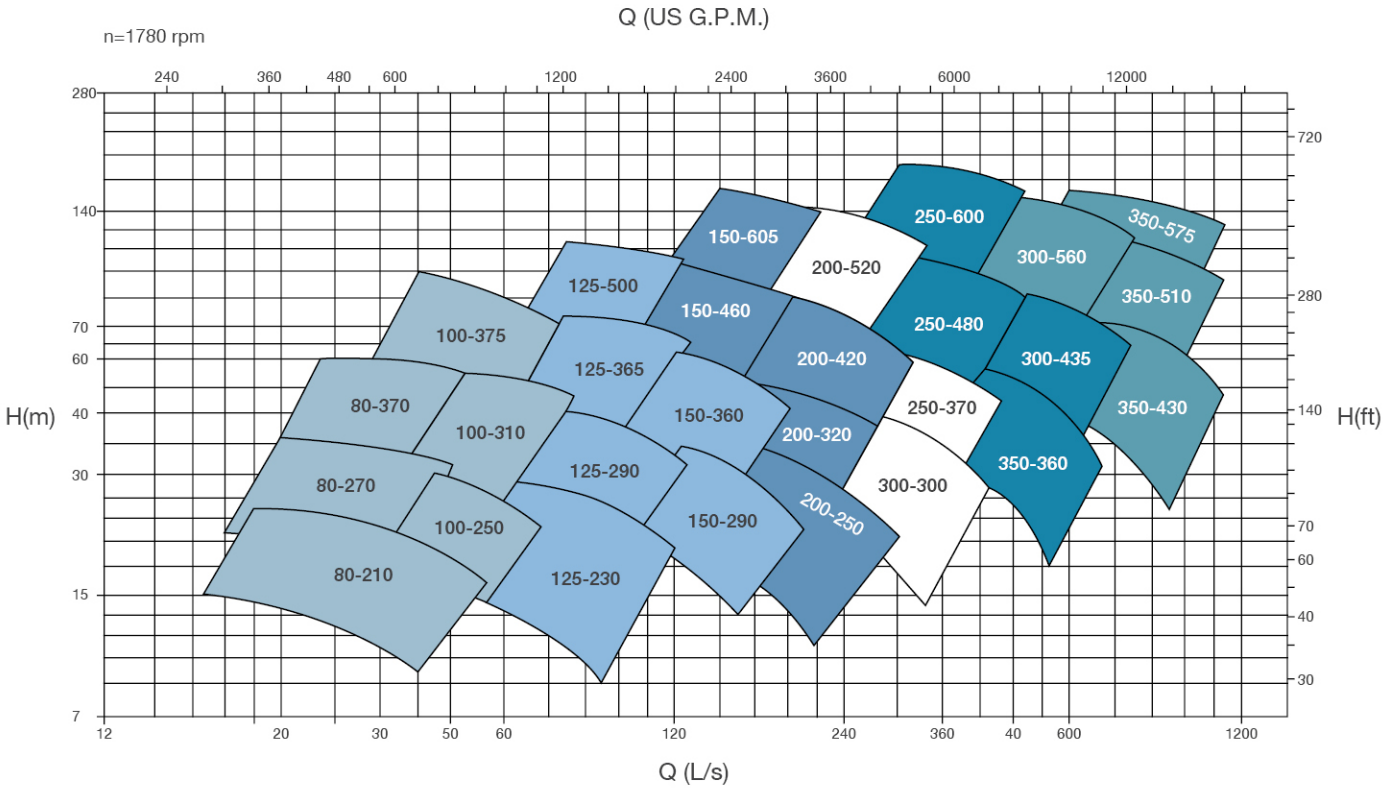

Thai Industrial Business Company Limited
Tel. : +66 (0) 65 265 4555 (Hotline) , +66 (0) 2 180 6456
E-mail : sales@tibflow.com

Copyright © Thai Industrial Business Co.,Ltd. All rights reserved.

TIB-GC SERIES INSTALLATION DIMENSIONS

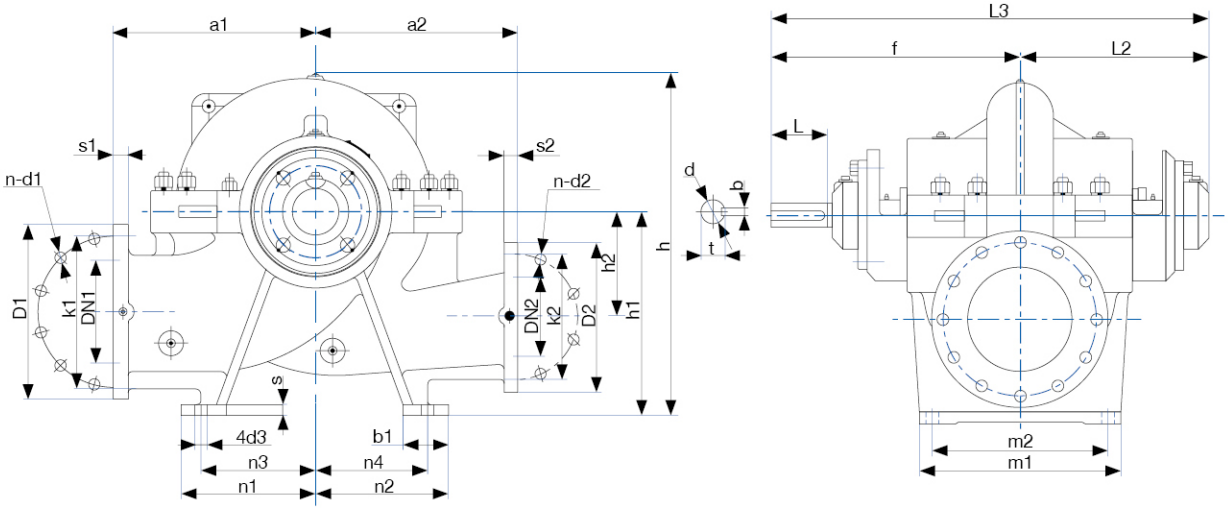

Model	DN1	DN2	Pump Dimensions								Foot									Shaft				Weight (kg)
			a1	a2	f	L2	L3	h	h1	h2	m1	m2	n1	n2	n3	n4	b1	d3	s	d	b	L	t	
TIB-GC80-210	125	80	300	300	385	300	685	490	315	140	320	270	205	205	170	170	80	ø25	22	ø34	10	80	37.3	179
TIB-GC80-270								528																200
TIB-GC80-370			330	330				558									75							209
TIB-GC100-250	150	100						570	355	170			235	235	200	200	80							209
TIB-GC100-310								605																257
TIB-GC100-375			370	370				620									75							245
TIB-GC125-230	200	125			485	365	850	620	400	200	390	340	265	265	225	225	90			ø44	12	110	47.3	309
TIB-GC125-290								635																293
TIB-GC125-365								665																311
TIB-GC125-500			450	450				720					320	320	280	280	85		26					414
TIB-GC150-290		150	400	400				660		210			265	265	225	225	90		22					323
TIB-GC150-360								670		200														350
TIB-GC150-460			450	450	540	420	960	710	500	300	480	430	315	315	280	280	75		25	ø54	16		58.3	418
TIB-GC150-605			600	500				885					390	390	350	350	95	ø30	35					755
TIB-GC200-250	250	200	450	450				793		240			315	315	280	280	85	ø25	25					450
TIB-GC200-320								805																506
TIB-GC200-420			500	500				830					330	330			100							551
TIB-GC200-520			600	500	629	479	1108	925	560	300	490	400	400	400	350	350		ø28	28	ø64	18	145	68.4	700
TIB-GC200-670			650	550				1055	600	350	500						110	ø30	35					1218
TIB-GC250-280	300	250	500	500				955		300	480						100		28					550
TIB-GC250-370								975																719
TIB-GC250-480			550	550	695	515	1210	985		330	600	520							32	ø74	20	170	78.9	906
TIB-GC250-600			650					1060	630	350							110		35					1116
TIB-GC300-300	350	300	550	500	629	479	1108	1010	630	300	500	400	400	400	350	350	100	ø30	30	ø64	18	145	68.4	792
TIB-GC300-435	400	300	650	550	695	515	1210	1072	670	333	600	520							32	ø74	20	170	78.9	947
TIB-GC300-560			700	650	785	605	1390	1140	710	350	620		525	525	475	475	110		35	ø84	22	180	89.4	1301
TIB-GC300-700			750					1255	750	400			530	530			120		40					1640
TIB-GC350-360	450	350	650	550	695	515	1210	1100	670	350	600		400	400	350	350	100		32	ø74	20	170	78.9	1077
TIB-GC350-430			750	650	785	605	1390	1200	750	400			530	530	475	475	120		35	ø84	22	180	89.4	1445
TIB-GC350-510	400		700					1200			620		525	525			110		40					1456
TIB-GC350-575			750	750	853	667	1520	1400	900	420	780	630	560	560	485	485	150	ø35	35	ø95	25	210	100.4	1900
TIB-GC400-525	500	400	750	700	968	747	1715	1410		475	890	740								ø105	28		111.4	1600
TIB-GC400-665			1000	750				1550	1000	525														2000

FLANGE DIMENSIONS (ISO7005.2 DIN2501 PN16 GB/T17241.6 PN1.6)

DN1/DN2	80	100	125	150	200	250	300	350	400	450	500	600	700
K1/K2	160	180	210	240	295	355	410	470	525	585	650	770	840
D1/D2	200	220	250	285	340	405	460	520	580	640	715	840	910
S1/S2	22	24	26	26	30	32	34	38	40	40	46	54	54
n-d1/n-d2	8-ø17.5	8-ø17.5	8-ø17.5	8-ø22	12-ø22	12-ø26	12-ø26	16-ø26	16-ø30	20-ø30	20-ø33	20-ø36	24-ø36

Thai Industrial Business Company Limited
Tel. : +66 (0) 65 265 4555 (Hotline) , +66 (0) 2 180 6456
E-mail : sales@tibflow.com
www.tibflow.com

Copyright © Thai Industrial Business Co.,Ltd. All rights reserved.

TIB DOUBLE-SUCTION
SPLIT CASING PUMP

COMPLETE LIQUID PUMPING SYSTEM SOLUTIONS EXPERTISE

บริษัท ไทยธุรกิจอุตสาหกรรม จำกัด
THAI INDUSTRIAL BUSINESS CO., LTD.

555 อาคารรสา วัน ยูนิตเลขที่ 2203-2 ชั้นที่ 22 ถนนพหลโยธิน
แขวงจตุจักร เขตจตุจักร กรุงเทพมหานคร 10900

555 Rasa One, Unit No. 2203-2, 22 floor Phaholyothin Road,
Chatuchak, Chatuchak, Bangkok 10900 Thailand.

Tel. +66 (0) 65 265 4555 (Hotline) , +66 (0) 2 180 6456

CONTACT US

sales@tibflow.com
www.tibflow.com