TIB

TIB CLOSE-COUPLED END SUCTION CENTRIFUGAL PUMP

TIB-EC SERIES

- Close-Coupled pumps have the impeller placed directly on the motor shaft.



COMPLETE LIQUID PUMPING SYSTEM SOLUTIONS EXPERTISE

Our products are guaranteed to meet international quality standards.

TIB Close-coupled End Suction Centrifugal Pump

Fully Integrated Industrial Pumping System

TIB-EC SERIES







DESCRIPTION AND FEATURES

TIB-EC series are Close-coupled type of centrifugal pump series. No need to use couplings and motor shaft is pluged into pump shaft to ensure concentricity and shorten the axial length. Highly interchangeable parts, space saving, various applications in plants, mines, city water supplies, fire-fighting systems and irrigation.

MODEL INSTRUCTION:

TIB-EC 65 - 32 - 4500 2 X-X-X - M

- M — Mechanical Seal
- X-X-X — Casting - Impeller - Shaft Material
- 2 — 2P Motor
- 4500 — Motor Power 18.5 kw
- 32 — Impeller Norminal Diameter
- 65 — Discharge Size
- TIB-EC — Series

MATERIAL CODE

C : Cast Iron
Q : Ductile Iron
B : Brass
S1 : SUS304
S2 : SUS316
S3 : SUS420

M : Mechanical Seal

DESIGN AND STRUCTURE

Design	Performance and dimensions referring to the European standard BS EN733/DIN24255
Structure	Close-coupled, Axial End-Suction, Single-Stage, Single-Suction, Volute Casing
DN (mm)	32~150
Flange	DIN2501 PN16 GB / T17241.6 PN1.6

APPLICATIONS

- Water supply and drainage
- HVAC and Cooling Tower
- Marine - Ballasting & Bilge
- Booster and Pressurization Set
- Irrigation and agriculture
- Water supply and drainage
- Food and chemical industry (with stainless steel material)

MATERIAL

Part	Standard Material	Options on request
Casing	Cast Iron	Ductile Iron / SUS304 / SUS316
Impeller	Brass	Cast Iron / SUS304 / SUS316
Shaft	SUS420	SUS304 / SUS316
Shaft Seal	Mechanical Seal	Yes

OPERATING DATA

Flow Rate(Q)	4~500 m^3/h
Head(H)	8~150 m
Speed	1450 or 2900 rpm (50 Hz) / 1750 or 3500 rpm (60 Hz)
Max Tempurature	105°C
Working Pressure	1.0 MPa standard ; 1.6 MPa on request
Conveying Medium	Clean water or liquids similar to clean water in physical property

Thai Industrial Business Company Limited
Tel. : +66 (0) 65 265 4555 (Hotline) , +66 (0) 2 180 6456
E-mail : sales@tibflow.com

Copyright © Thai Industrial Business Co.,Ltd. All rights reserved.

TIB-EC SERIES EXPLODE VIEW AND LIST OF PARTS

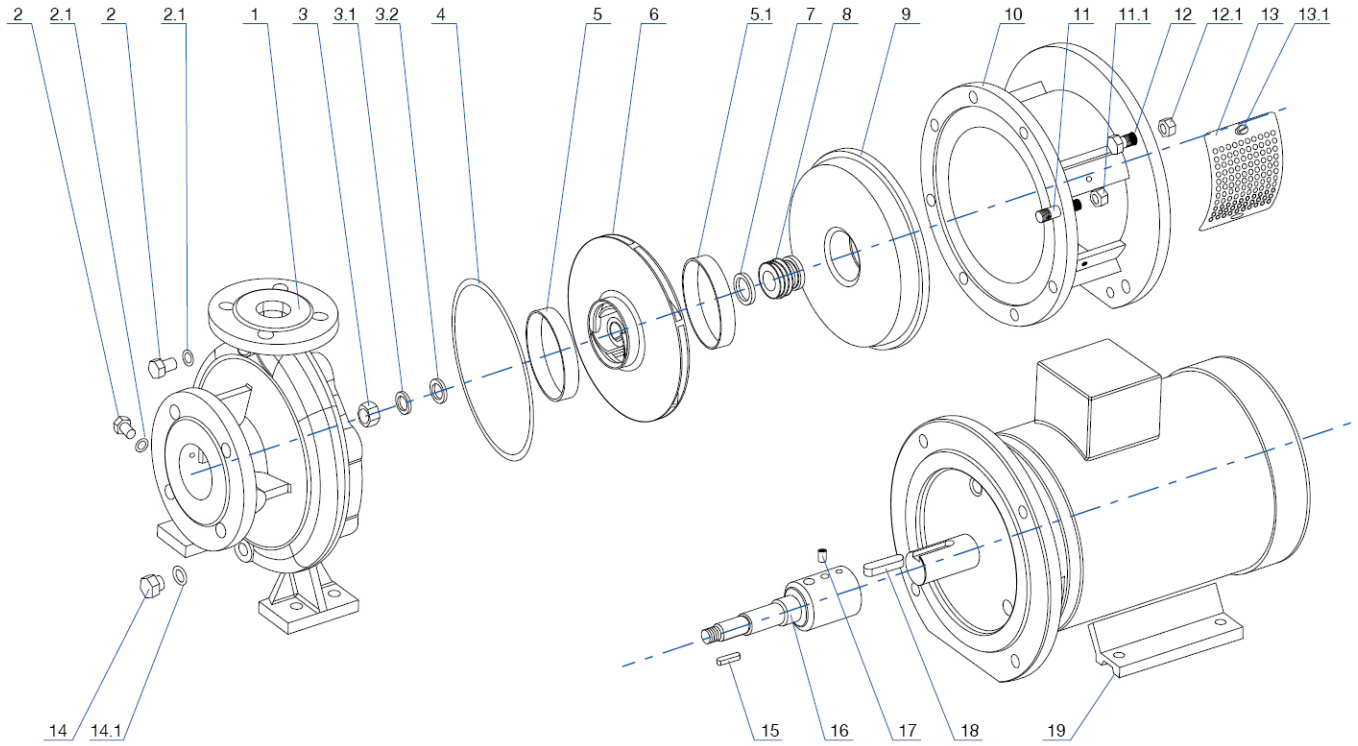

Code	Part Name
1	Casing
2	Plug
2.1	Plug Spacer
3	Nut
3.1	Flat Washer
3.2	Spring Washer
4	Casing Gasket
5	Front-Wear Ring
5.1	Back-Wear Ring
6	Impeller
7	Seal Seat
8	Mech.Seal
9	Casing Cover
10	Adapter

Code	Part Name
11	Screw Bolt
11.1	Screw Nut
12	Screw Bolt
12.1	Screw Nut
13	Guard
13.1	Screw
14	Plug
14.1	Plug Spacer
15	Key
16	Shaft
17	Screw
18	Key
19	Motor

Thai Industrial Business Company Limited
Tel. : +66 (0) 65 265 4555 (Hotline) , +66 (0) 2 180 6456
E-mail : sales@tibflow.com

Copyright © Thai Industrial Business Co.,Ltd. All rights reserved.

TIB-EC SERIES - 50Hz PERFORMANCE

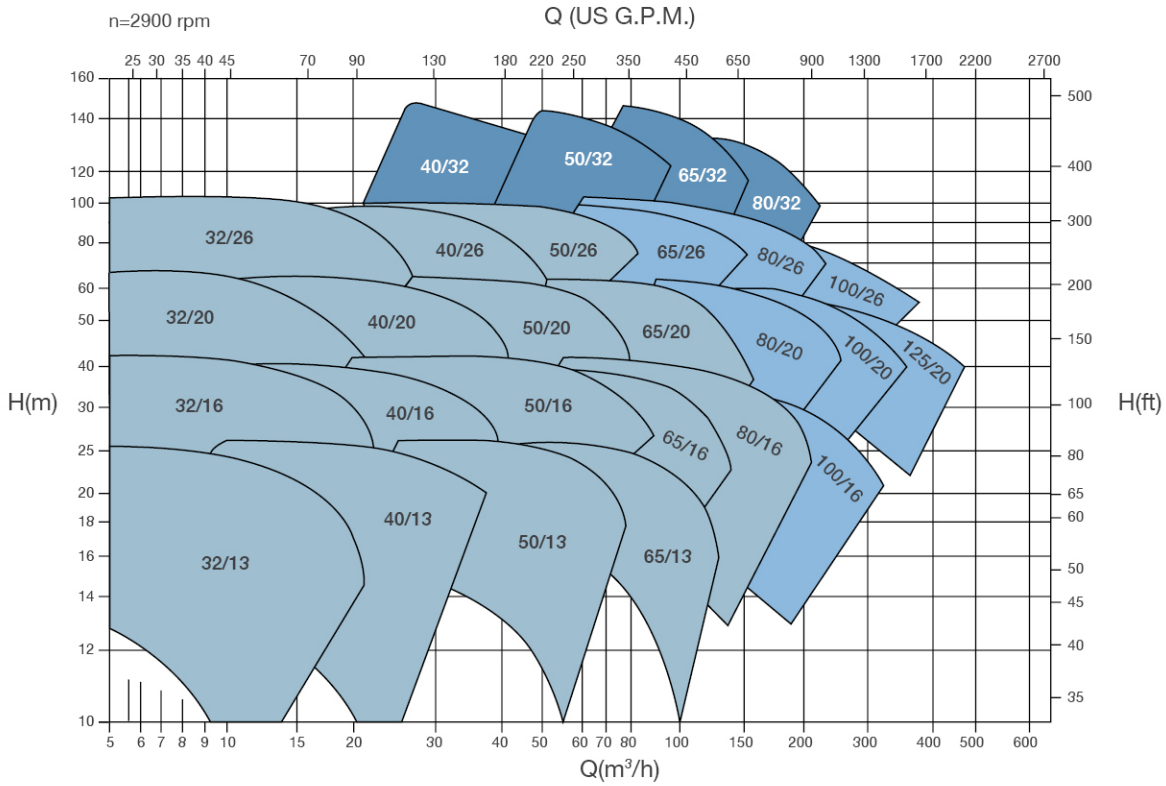

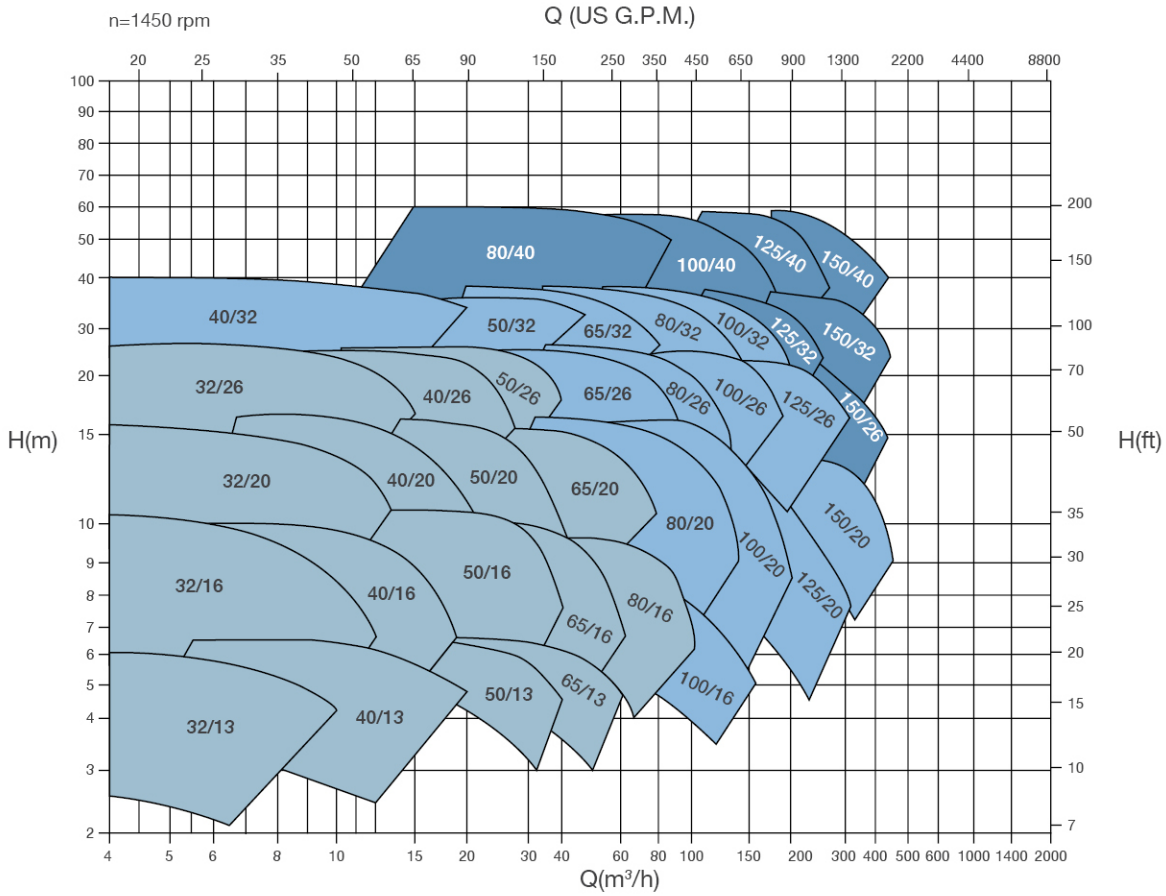

Thai Industrial Business Company Limited
Tel. : +66 (0) 65 265 4555 (Hotline) , +66 (0) 2 180 6456
E-mail : sales@tibflow.com

Copyright © Thai Industrial Business Co.,Ltd. All rights reserved.

TIB-EC SERIES - 60Hz PERFORMANCE

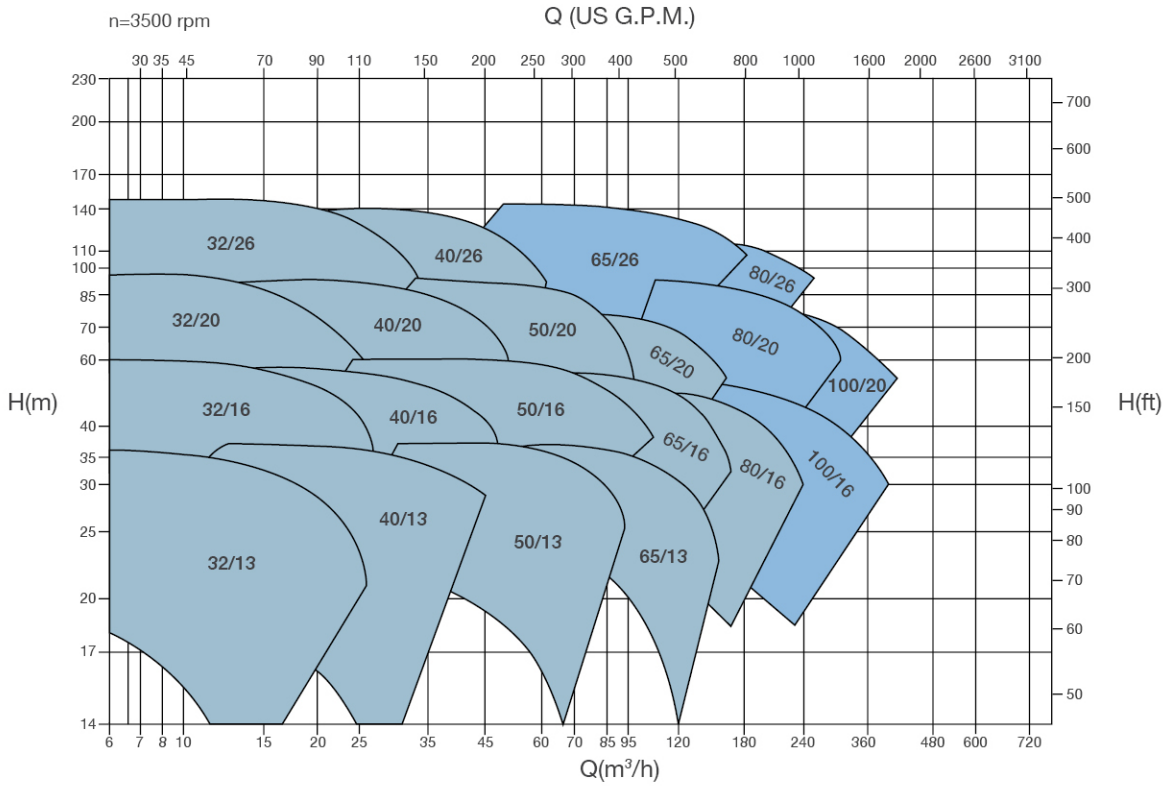

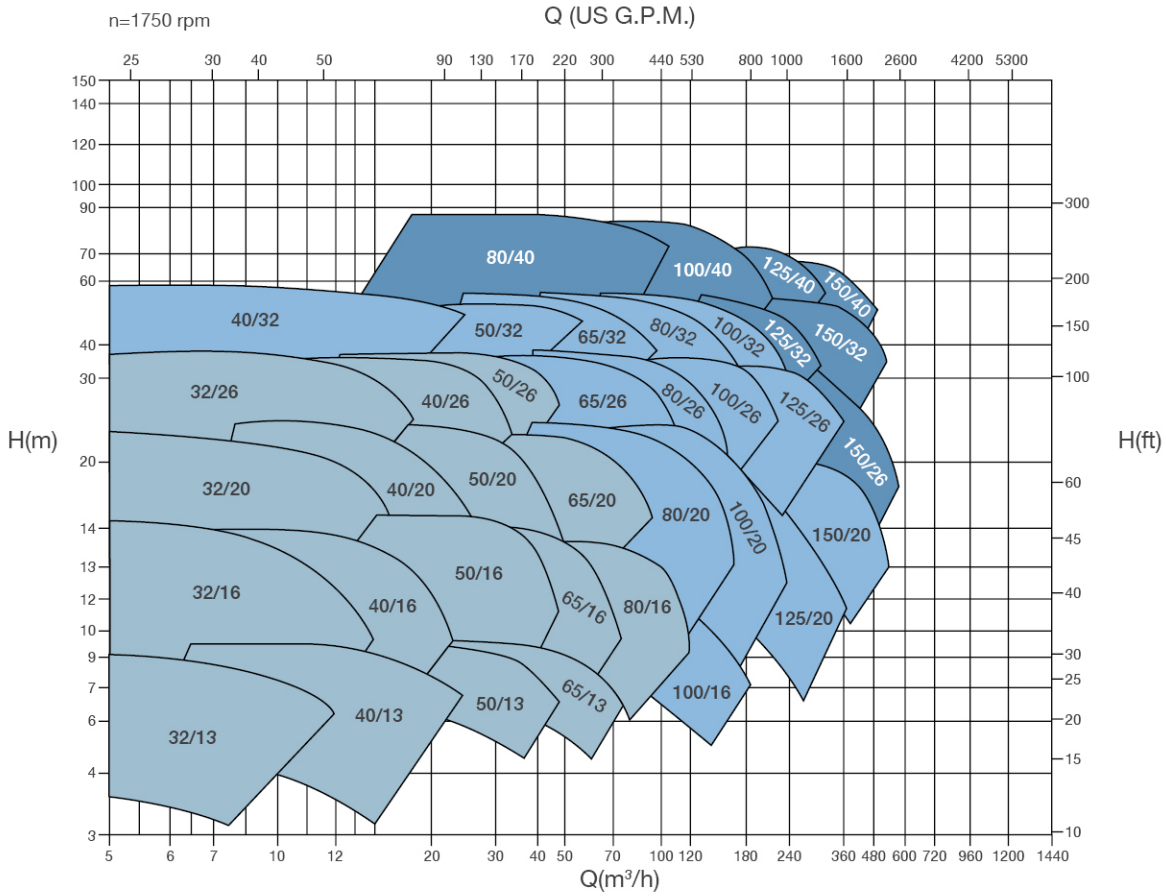

Thai Industrial Business Company Limited
Tel. : +66 (0) 65 265 4555 (Hotline) , +66 (0) 2 180 6456
E-mail : sales@tibflow.com

Copyright © Thai Industrial Business Co.,Ltd. All rights reserved.

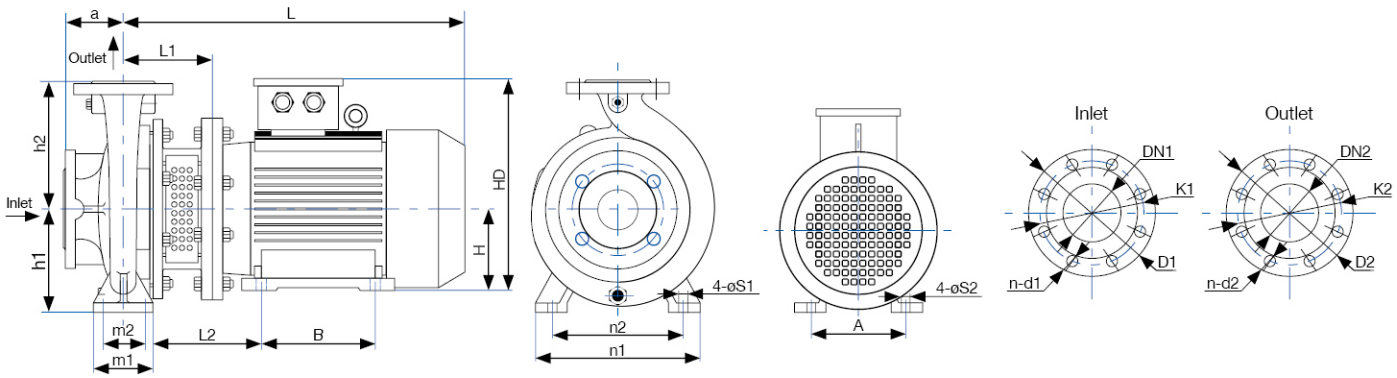

FLANGE DIMENSIONS (ISO7005.2 DIN2501 PN16 GB/T17241.6 PN1.6)

DN1/DN2	32	40	50	65	80	100	125	150	200
D1/D2	140	150	165	185	200	220	250	285	340
K1/K2	100	110	125	145	160	180	210	240	295
n-d1/n-d2	4-ø18	4-ø18	4-ø18	4-ø18	8-ø18	8-ø18	8-ø18	8-ø22	12-ø22

TIB-EC	Motor(B35)		Flange		Installation Dimensions(mm)																Weight(kg)		
Model	Model	kw	DN1	DN2	a	h1	h2	L1	L2	L	A	B	H	HD	m1	m2	n1	n2	S1	S2	Pump	Motor	Total
TIB-EC32/13-00554	Y2-801-4	0.55	50	32	80	112	140	152	167	407	125	100	80	220	100	70	190	140	14	10	27	16	43
TIB-EC32/13-01102	Y2-802-2	1.1																			27	17	44
TIB-EC32/13-01502	Y2-90S-2	1.5							173	422	140		90	250							27	21	48
TIB-EC32/13-02202	Y2-90L-2	2.2								447		125									27	26	52
TIB-EC40/13-00554	Y2-801-4	0.55	65	40					167	407	125	100	80	220			210	160			29	16	45
TIB-EC40/13-01502	Y2-90S-2	1.5							173	422	140		90	250							30	21	51
TIB-EC40/13-02202	Y2-90L-2	2.2							173	447		125									30	26	55
TIB-EC40/13-03002	Y2-100L-2	3						164	192	489	160	140	100	270							32	44	76
TIB-EC40/13-04002	Y2-112M-2	4							199	504	190		112	300							32	43	75
TIB-EC50/13-00554	Y2-801-4	0.55	65	50	100	132	160	152	167	407	125	100	80	220			240	190			30	16	46
TIB-EC50/13-00754	Y2-802-4	0.75																			30	17	47
TIB-EC50/13-01104	Y2-90S-4	1.1						152	173	422	140		90	250					14		31	22	54
TIB-EC50/13-03002	Y2-100L-2	3						164	192	489	160	140	100	270						12	39	44	83
TIB-EC50/13-04002	Y2-112M-2	4							199	504	190		112	300							39	43	82
TIB-EC50/13-05502	Y2-132S1-2	5.5						187	241	577	216		132	345							40	65	105
TIB-EC50/13-07502	Y2-132S2-2	7.5																			40	69	109
TIB-EC65/13-00754	Y2-802-4	0.75	80	65	100	160	180	152	154.5	407	125	100	80	220	125	95	280	212		10	36	17	53
TIB-EC65/13-01104	Y2-90S-4	1.1							160.5	422	140		90	250							37	22	60
TIB-EC65/13-01504	Y2-90L-4	1.5								477		125									37	27	64
TIB-EC65/13-05502	Y2-132S1-2	5.5						187	228.5	577	216	140	132	345						12	46	65	111
TIB-EC65/13-07502	Y2-132S2-2	7.5																			46	69	115
TIB-EC65/13-11002	Y2-160M1-2	11						219	279.5	724	254	210	160	420						15	54	108	162
TIB-EC32/16-00554	Y2-801-4	0.55	50	32	80	132	160	152	167	407	125	100	80	220	100	70	240	190	14	10	31	16	48
TIB-EC32/16-00754	Y2-802-4	0.75																			31	17	49
TIB-EC32/16-02202	Y2-90L-4	2.2							173	447	140	125	90	250							32	26	57
TIB-EC32/16-03002	Y2-100L-2	3						164	192	489	160	140	100	270						12	33	44	77
TIB-EC32/16-04002	Y2-112M-2	4							199	504	190		112	300							33	43	76
TIB-EC32/16-05502	Y2-132S1-2	5.5						187	241	577	216		132	345						15	38	65	103
TIB-EC40/16-00554	Y2-801-4	0.55	65	40	80	132	160	152	167	407	125	100	80	220	100	70	240	190	14	10	32	16	48
TIB-EC40/16-00754	Y2-802-4	0.75																			32	17	49
TIB-EC40/16-01104	Y2-90S-4	1.1						152	173	422	140	100	90	250							33	22	56
TIB-EC40/16-03002	Y2-100L-2	3						164	192	489	160	140	100	270						12	35	44	79
TIB-EC40/16-04002	Y2-112M-2	4							199	504	190	140	112	300							35	43	78
TIB-EC40/16-05502	Y2-132S1-2	5.5						187	241	577	216	140	132	345							39	65	104
TIB-EC40/16-07502	Y2-132S2-2	7.5																			39	69	108

Thai Industrial Business Company Limited
Tel. : +66 (0) 65 265 4555 (Hotline) , +66 (0) 2 180 6456
E-mail : sales@tibflow.com

Copyright © Thai Industrial Business Co.,Ltd. All rights reserved.

TIB-EC	Motor(B35)		Flange		Installation Dimensions(mm)																Weight(kg)		
Model	Model	kw	DN1	DN2	a	h1	h2	L1	L2	L	A	B	H	HD	m1	m2	n1	n2	S1	S2	Pump	Motor	Total
TIB-EC50/16-00554	Y2-801-4	0.55	65	50	100	160	180	152	167	407	125	100	80	220	100	70	265	212	14	10	35	16	51
TIB-EC50/16-00754	Y2-802-4	0.75																			35	17	52
TIB-EC50/16-01104	Y2-90S-4	1.1							173	422	140	100	90	250							36	22	58
TIB-EC50/16-01504	Y2-90L-4	1.5								447		125									36	27	62
TIB-EC50/16-05502	Y2-132S1-2	5.5						187	241	577	216	140	132	345						12	42	65	107
TIB-EC50/16-07502	Y2-132S2-2	7.5																			42	69	111
TIB-EC50/16-11002	Y2-160M1-2	11						219	292	724	254	210	160	420						15	45	108	153
TIB-EC50/16-15002	Y2-160M2-2	15																			45	109	154
TIB-EC65/16-00754	Y2-802-4	0.75	80	65			200	152	154.5	407	125	100	80	220	125	95	280			10	39	17	56
TIB-EC65/16-01104	Y2-90S-4	1.1							160.5	422	140	100	90	250							40	22	62
TIB-EC65/16-01504	Y2-90L-4	1.5								447		125									40	27	67
TIB-EC65/16-02204	Y2-100L1-4	2.2						164	179.5	489	160	140	100	270						12	42	34	75
TIB-EC65/16-05502	Y2-132S1-2	5.5						187	228.5	577	216	140	132	345							47	65	112
TIB-EC65/16-07502	Y2-132S2-2	7.5																			47	69	116
TIB-EC65/16-11002	Y2-160M1-2	11						219	279.5	724	254	210	160	420						15	49	108	157
TIB-EC65/16-15002	Y2-160M2-2	15																			49	109	158
TIB-EC65/16-18502	Y2-160L-2	18.5								779		254									49	133	182
TIB-EC80/16-01504	Y2-90L-4	1.5	100	80	125	180	225	152	160.5	447	140	125	90	250	125	95	320	250		10	49	27	76
TIB-EC80/16-02204	Y2-100L1-4	2.2						164	179.5	489	160	140	100	270						12	51	34	85
TIB-EC80/16-03004	Y2-100L2-4	3																			51	37	88
TIB-EC80/16-11002	Y2-160M1-2	11						219	279.5	724	254	210	160	420						15	58	108	166
TIB-EC80/16-15002	Y2-160M2-2	15	100	80	125	180	225	219	279.5	724	254	210	160	420	125	95	320	250	14	15	58	109	167
TIB-EC80/16-18502	Y2-160L-2	18.5								779		254									58	133	191
TIB-EC80/16-22002	Y2-180M-2	22							292.5	809	279	241	180	455							58	155	213
TIB-EC80/16-30002	Y2-200L1-2	30						222	307.5	882	318	305	200	505						19	66	224	290
TIB-EC100/16-02204	Y2-100L1-4	2.2	125	100	125	200	250	191	194	516	160	140	100	270	160	120	360	280	18	12	70	34	104
TIB-EC100/16-03004	Y2-100L2-4	3																			70	37	107
TIB-EC100/16-04004	Y2-112M-4	4							201	531	190	140	112	300							71	47	118
TIB-EC100/16-15002	Y2-160M2-2	15						246	294	751	254	210	160	420						15	78	109	187
TIB-EC100/16-18502	Y2-160L-2	18.5								806	254	241									78	133	211
TIB-EC100/16-22002	Y2-180M-2	22							307	836	279	241	180	455							80	155	235
TIB-EC100/16-30002	Y2-200L1-2	30						249	322	909	318	305	200	505						19	82	224	306
TIB-EC32/20-00554	Y2-801-4	0.55	50	32	80	160	180	152	167	407	125	100	80	220	100	70	240	190	14	10	38	16	54
TIB-EC32/20-00754	Y2-802-4	0.75																			38	17	55
TIB-EC32/20-01104	Y2-90S-4	1.1							173	422	140	100	90	250							39	22	62
TIB-EC32/20-01504	Y2-90L-4	1.5								447		125									39	27	66
TIB-EC32/20-04002	Y2-112M-2	4						164	199	504	190	140	112	300						12	42	43	85
TIB-EC32/20-05502	Y2-132S1-2	5.5						187	241	577	216	140	132	345							44	65	109
TIB-EC32/20-07502	Y2-132S2-2	7.5																			44	69	114
TIB-EC32/20-11002	Y2-160M1-2	11						219	292	724	254	210	160	420						15	49	108	157
TIB-EC40/20-00754	Y2-802-4	0.75	65	40	100	160	180	152	167	407	125	100	80	220	100	70	265	212	14	10	37	17	54
TIB-EC40/20-01104	Y2-90S-4	1.1							173	422	140	100	90	250							38	22	61
TIB-EC40/20-01504	Y2-90L-4	1.5								447		125									38	27	65
TIB-EC40/20-05502	Y2-132S1-2	5.5						187	241	577	216	140	132	345						12	43	65	108
TIB-EC40/20-07502	Y2-132S2-2	7.5																			43	69	112
TIB-EC40/20-11002	Y2-160M1-2	11						219	292	724	254	210	160	420						15	48	108	156
TIB-EC50/20-01104	Y2-90S-4	1.1	65	50			200	155	173	425	140	100	90	250						10	43	22	65
TIB-EC50/20-01504	Y2-90L-4	1.5								450		125									43	27	70
TIB-EC50/20-02204	Y2-100L-4	2.2						167	192	492	160	140	100	270						12	46	34	79
TIB-EC50/20-07502	Y2-132S2-2	7.5	65	50	100	160	200	190	241	580	216	140	132	345	100	70	265	212	14	12	48	69	117
TIB-EC50/20-11002	Y2-160M1-2	11						222	292	727	254	210	160	420						15	53	108	161
TIB-EC50/20-15002	Y2-160M2-2	15																			53	109	162
TIB-EC50/20-18502	Y2-160L-2	18.5								782		254									53	133	185
TIB-EC65/20-02204	Y2-100L1-4	2.2	80	65	100	180	225	164	179.5	489	160	140	100	270	125	95	320	250	14	12	50	34	83
TIB-EC65/20-03004	Y2-100L2-4	3																			50	37	86
TIB-EC65/20-04004	Y2-112M-4	4							186.5	504	190	140	112	300							50	47	96
TIB-EC65/20-15002	Y2-160M2-2	15						219	279.5	724	254	210	160	420						15	57	109	166
TIB-EC65/20-18502	Y2-160L-2	18.5								779		254									57	133	189
TIB-EC65/20-22002	Y2-180M-2	22							292.5	809	279	241	180	455							57	155	212
TIB-EC65/20-30002	Y2-200L1-2	30						222	307.5	882	318	305	200	505						19	63	224	288
TIB-EC80/20-03004	Y2-100L2-4	3	100	80	125	180	250	180	195.5	505	160	140	100	270	125	95	345	280		12	56	37	93
TIB-EC80/20-04004	Y2-112M-4	4							202.5	520	190	140	112	300							56	47	103
TIB-EC80/20-05504	Y2-132S-4	5.5						203	244.5	593	216	140	132	345							60	65	125
TIB-EC80/20-07504	Y2-132M-4	7.5								633		178									60	79	138
TIB-EC80/20-22002	Y2-180M-2	22						235	308.5	825	279	241	180	455						15	68	155	223
TIB-EC80/20-30002	Y2-200L1-2	30						238	323.5	898	318	305	200	505						19	70	224	294
TIB-EC80/20-37002	Y2-200L2-2	37																			70	235	305
TIB-EC80/20-45002	Y2-225M-2	45							339.5	943	356	311	225	560							75	286	360

Thai Industrial Business Company Limited
Tel. : +66 (0) 65 265 4555 (Hotline) , +66 (0) 2 180 6456
E-mail : sales@tibflow.com

Copyright © Thai Industrial Business Co.,Ltd. All rights reserved.

TIB-EC	Motor(B35)		Flange		Installation Dimensions(mm)																Weight(kg)		
Model	Model	kw	DN1	DN2	a	h1	h2	L1	L2	L	A	B	H	HD	m1	m2	n1	n2	S1	S2	Pump	Motor	Total
TIB-EC100/20-03004	Y2-100L2-4	3	125	100	125	200	280	180	183	505	160	140	100	270	160	120	360	280	18	12	68	37	105
TIB-EC100/20-04004	Y2-112M-4	4							190	520	190	140	112	300							68	47	115
TIB-EC100/20-05504	Y2-132S-4	5.5						203	232	593	216	140	132	345							69	65	134
TIB-EC100/20-07504	Y2-132M-4	7.5								633		178									69	79	147
TIB-EC100/20-11004	Y2-160M-4	11						235	283	740	254	210	160	420						15	72	108	180
TIB-EC100/20-30002	Y2-200L1-2	30						238	311	898	318	305	200	505						19	79	224	303
TIB-EC100/20-37002	Y2-200L2-2	37																			79	235	313
TIB-EC100/20-45002	Y2-225M-2	45							327	943	356	311	225	560							83	286	369
TIB-EC100/20-55002	Y2-250M-2	55						272	380	1042	406	349	250	615						24	95	373	469
TIB-EC100/20-75002	Y2-280S-2	75	125	100	125	200	280	272	402	1117	457	368	280	680	160	120	360	280	18	24	96	485	580
TIB-EC125/20-07504	Y2-132M-4	7.5	150	125	140	250	315	203	232	633	216	178	132	345	160	120	400	315	18	12	92	79	171
TIB-EC125/20-11004	Y2-160M-4	11						235	283	740	254	210	160	420						15	96	108	204
TIB-EC125/20-45002	Y2-225M-2	45						238	327	943	356	311	225	560						19	106	286	392
TIB-EC125/20-55002	Y2-250M-2	55						272	380	1042	406	349	250	615						24	118	373	491
TIB-EC125/20-75002	Y2-280S-2	75							402	1117	457	368	280	680							119	485	604
TIB-EC125/20-90002	Y2-280M-2	90								1167		419									122	541	663
TIB-EC150/20-11004	Y2-160M-4	11	200	150	160	280	400	262	295	767	254	241	160	420	200	150			23	15	96	108	204
TIB-EC150/20-15004	Y2-160L-4	15								822		254									96	129	225
TIB-EC150/20-18504	Y2-180M-4	18.5							308	852	279	241	180	455							98	157	255
TIB-EC32/26-02204	Y2-100L1-4	2.2	50	32	100	180	225	174	187.5	499	160	140	100	270	125	95	320	250	14	12	55	34	89
TIB-EC32/26-03004	Y2-100L2-4	3																			55	37	92
TIB-EC32/26-11002	Y2-160M1-2	11						229	287.5	734	254	210	160	420						15	63	108	171
TIB-EC32/26-15002	Y2-160M2-2	15																			63	109	173
TIB-EC32/26-18502	Y2-160L-2	18.5								789		254									63	133	196
TIB-EC32/26-22002	Y2-180M-2	22							300.5	819	279	241	180	455							64	155	219
TIB-EC40/26-02204	Y2-100L1-4	2.2	65	40				174	187.5	499	160	140	100	270				250		12	55	34	89
TIB-EC40/26-03004	Y2-100L2-4	3																			55	37	92
TIB-EC40/26-11002	Y2-160M1-2	11						229	287.5	734	254	210	160	420						15	63	108	171
TIB-EC40/26-15002	Y2-160M2-2	15																			63	109	172
TIB-EC40/26-18502	Y2-160L-2	18.5								789		254									63	133	195
TIB-EC40/26-22002	Y2-180M-2	22							300.5	819	279	241	180	455							63	155	218
TIB-EC50/26-02204	Y2-100L1-4	2.2	65	50				175	187.5	500	160	140	100	270						12	56	34	90
TIB-EC50/26-03004	Y2-100L2-4	3																			56	37	93
TIB-EC50/26-04004	Y2-112M-4	4							194.5	515	190	178	112	300							56	47	103
TIB-EC50/26-05504	Y2-132S-4	5.5						198	236.5	588	216	140	132	345							60	65	125
TIB-EC50/26-18502	Y2-160L-4	18.5						230	287.5	790	254	254	160	420						15	62	133	195
TIB-EC50/26-22002	Y2-180M-2	22							300.5	820	279	241	180	455							65	155	220
TIB-EC50/26-30002	Y2-200L1-2	30	65	50	100	180	225	233	315.5	893	318	305	200	505	125	95	320	250	14	19	71	224	295
TIB-EC50/26-37002	Y2-200L2-2	37																			71	235	306
TIB-EC65/26-04004	Y2-112M-4	4	80	65	100	200	250	180	190	520	190	140	112	300	160	120	360	280	18	12	66	47	113
TIB-EC65/26-05504	Y2-132S-4	5.5						203	232	593	216	140	132	345							68	65	133
TIB-EC65/26-07504	Y2-132M-4	7.5								633		178									68	79	147
TIB-EC65/26-30002	Y2-200L1-2	30						238	311	898	318	305	200	505						19	80	224	304
TIB-EC65/26-37002	Y2-200L2-2	37																			80	235	315
TIB-EC65/26-45002	Y2-225M-2	45						238	327	943	356	311	225	560							84	286	370
TIB-EC65/26-55002	Y2-250M-2	55						272	380	1042	406	349	250	615						24	98	373	471
TIB-EC80/26-05504	Y2-132S-4	5.5	100	80	125	200	280	203	232	593	216	140	132	345	160	120	400	315	18	12	75	65	140
TIB-EC80/26-07504	Y2-132M-4	7.5								633		178									75	79	153
TIB-EC80/26-11004	Y2-160M-4	11						235	283	740	254	210	160	420						15	81	108	189
TIB-EC80/26-37002	Y2-200L2-2	37						238	311	898	318	305	200	505						19	100	235	335
TIB-EC80/26-45002	Y2-225M-2	45							327	943	356	311	225	560							102	286	388
TIB-EC80/26-55002	Y2-250M-2	55						272	380	1042	406	349	250	615						24	105	373	478
TIB-EC80/26-75002	Y2-280S-2	75							402	1117	457	368	280	680							105	485	589
TIB-EC100/26-07504	Y2-132M-4	7.5	125	100	140	225	280	207	236	637	216	178	132	345	160	120	400	315	18	12	85	79	164
TIB-EC100/26-11004	Y2-160M-4	11						239	287	744	254	210	160	420						15	89	108	197
TIB-EC100/26-15004	Y2-160L-4	15								799		254									89	129	217
TIB-EC100/26-55002	Y2-250M-2	55						276	384	1046	406	349	250	615						24	105	373	478
TIB-EC100/26-75002	Y2-280S-2	75							406	1121	457	368	280	680							112	485	597
TIB-EC100/26-90002	Y2-280M-2	90								1171		419									112	541	653
TIB-EC125/26-11004	Y2-160M-4	11	150	125		250	355	239	287	744	254	210	160	420						15	104	108	212
TIB-EC125/26-15004	Y2-160L-4	15								799		254									104	129	233
TIB-EC125/26-18504	Y2-180M-4	18.5							300	829	279	241	180	455							104	157	261
TIB-EC125/26-22004	Y2-180L-4	22								869		279									104	179	283
TIB-EC125/26-30004	Y2-200L-4	30						242	315	901	318	305	200	505						19	110	240	350
TIB-EC150/26-15004	Y2-160L-4	15	200	150	160	250	355	248	281	808	254	254	160	420	200	150	450	350	23	15	135	129	264
TIB-EC150/26-18504	Y2-180M-4	18.5	200	150	160	250	355	248	294	838	279	241	180	455	200	150	450	350	23	15	135	157	292
TIB-EC150/26-22004	Y2-180L-4	22								878		279									135	179	314
TIB-EC150/26-30004	Y2-200L-4	30							306	908	318	305	200	505						19	154	240	394

Thai Industrial Business Company Limited
Tel. : +66 (0) 65 265 4555 (Hotline) , +66 (0) 2 180 6456
E-mail : sales@tibflow.com

Copyright © Thai Industrial Business Co.,Ltd. All rights reserved.

TIB-EC	Motor(B35)		Flange		Installation Dimensions(mm)															Weight(kg)		
Model	Model	kw	DN1	DN2	a	h1	h2	L1	L2	L	A	B	H	HD	m1	m2	n1	n2	S1	S2	Pump	Motor	Total
TIB-EC40/32-03004	Y2-100L2-4	3	65	40	125	200	250	180	195.5	505	160	140	100	270	125	95	345	280	14	12	75	37	112
TIB-EC40/32-04004	Y2-112M-4	4							202.5	520	190	140	112	300							75	47	122
TIB-EC40/32-05504	Y2-132S-4	5.5						202	243.5	592	216	140	132	345							79	65	144
TIB-EC40/32-07504	Y2-132M-4	7.5								632		178									79	79	157
TIB-EC40/32-22002	Y2-180M-2	22						238	311.5	828	279	241	180	455						15	84	155	239
TIB-EC40/32-30002	Y2-200L1-2	30						238	323.5	898	318	305	200	505						19	88	224	313
TIB-EC40/32-37002	Y2-200L2-2	37																			88	235	323
TIB-EC40/32-45002	Y2-225M-2	45							339.5	943	356	311	225	560							96	286	381
TIB-EC40/32-55002	Y2-250M-2	55						274	394.5	1044	406	349	250	615						24	114	373	487
TIB-EC50/32-04004	Y2-112M-4	4	65	50		225	280	180	202.5	520	190	140	112	300						12	77	47	124
TIB-EC50/32-05504	Y2-132S-4	5.5						202	243.5	592	216		132	345							81	65	147
TIB-EC50/32-07504	Y2-132M-4	7.5								632		178									81	79	160
TIB-EC50/32-11004	Y2-160M-4	11						238	298.5	743	254	210	160	420						15	86	108	194
TIB-EC50/32-37002	Y2-200L2-2	37						238	323.5	898	318	305	200	505						19	91	235	325
TIB-EC50/32-45002	Y2-225M-2	45							339.5	943	356	311	225	560							98	286	384
TIB-EC50/32-55002	Y2-250M-2	55						274	394.5	1044	406	349	250	615						24	116	373	490
TIB-EC50/32-75002	Y2-280S-2	75							416.5	1119	457	368	280	680							117	485	601
TIB-EC65/32-05504	Y2-132S-4	5.5	80	65				201	230	591	216	140	132	345	160	120	400	315	18	12	92	65	157
TIB-EC65/32-07504	Y2-132M-4	7.5								631		178									92	79	171
TIB-EC65/32-11004	Y2-160M-4	11						235	283	740	254	210	160	420						15	95	108	203
TIB-EC65/32-15004	Y2-160L-4	15								795		254									95	129	224
TIB-EC65/32-45002	Y2-225M-2	45						252	341	957	356	311	225	560						19	116	286	401
TIB-EC65/32-55002	Y2-250M-2	55						272	380	1042	406	349	250	615						24	122	373	496
TIB-EC65/32-75002	Y2-280S-2	75							402	1117	457	368	280	680							122	485	607
TIB-EC65/32-90002	Y2-280M-2	90								1167		419									122	541	663
TIB-EC80/32-07504	Y2-132M-4	7.5	100	80	125	250	315	201	230	631	216	178	132	345	160	120	400	315	18	12	95	79	174
TIB-EC80/32-11004	Y2-160M-4	11						235	283	740	254	210	160	420						15	100	108	208
TIB-EC80/32-15004	Y2-160L-4	15								795		254									100	129	229
TIB-EC80/32-18504	Y2-180M-4	18.5							296	825	279	241	180	455							105	157	262
TIB-EC80/32-75002	Y2-280S-2	75						272	402	1117	457	368	280	680						24	127	485	612
TIB-EC80/32-90002	Y2-280M-2	90								1167		419									127	541	668
TIB-EC100/32-11004	Y2-160M-4	11	125	100	140			235	283	740	254	210	160	420						15	105	108	213
TIB-EC100/32-15004	Y2-160L-4	15								795		254									105	129	233
TIB-EC100/32-18504	Y2-180M-4	18.5							296	825	279	241	180	455							105	157	262
TIB-EC100/32-22004	Y2-180L-4	22								865		279									105	179	283
TIB-EC100/32-30004	Y2-200L-4	30						237	310	897	318	305	200	505						19	111	240	351
TIB-EC125/32-15004	Y2-160L-4	15	150	125	140	280	355	249	282	809	254	254	160	420	200	150	500	400	23	15	138	129	266
TIB-EC125/32-18504	Y2-180M-4	18.5							295	839	279	241	180	455							138	157	295
TIB-EC125/32-22004	Y2-180L-4	22								879		279									138	179	316
TIB-EC125/32-30004	Y2-200L-4	30							307	909	318	305	200	505						19	140	240	379
TIB-EC125/32-37004	Y2-225S-4	37						285	359	965	356	286	225	560							148	301	449
TIB-EC150/32-22004	Y2-180L-4	22	200	150	160		400	250	295	880	279	279	180	455			550	450		15	153	179	332
TIB-EC150/32-30004	Y2-200L-4	30							307	910	318	305	200	505						19	155	240	395
TIB-EC150/32-37004	Y2-225S-4	37						286	359	966	356	286	225	560							163	301	464
TIB-EC150/32-45004	Y2-225M-4	45								991		311									163	312	476
TIB-EC150/32-55004	Y2-250M-4	55							378	1056	406	349	250	615						24	178	383	561
TIB-EC80/40-15004	Y2-160L-4	15	100	80	125	280	355	249	297	809	254	254	160	420	160	120	400	340	18	15	140	129	269
TIB-EC80/40-18504	Y2-180M-4	18.5							310	839	279	241	180	455							142	157	299
TIB-EC80/40-22004	Y2-180L-4	22								879		279									142	179	321
TIB-EC80/40-30004	Y2-200L-4	30							322	909	318	305	200	505						19	148	240	387
TIB-EC100/40-22004	Y2-180L-4	22	125	100	140			284	295	879	279	279	180	455	200	150	500	400	23	15	160	179	339
TIB-EC100/40-30004	Y2-200L-4	30							307	909	318	305	200	505						19	162	240	401
TIB-EC100/40-37004	Y2-225S-4	37							358	964	356	286	225	560							168	301	469
TIB-EC100/40-45004	Y2-225M-4	45	125	100	140	280	355	284	358	989	356	311	225	560	200	150	500	400	23	19	168	312	480
TIB-EC125/40-30004	Y2-200L-4	30	150	125		315	400	249	307	909	318	305	200	505							170	240	410
TIB-EC125/40-37004	Y2-225S-4	37						284	358	964	356	286	225	560							176	301	476
TIB-EC125/40-45004	Y2-225M-4	45								989		311									176	312	488
TIB-EC125/40-55004	Y2-250M-4	55							377	1054	406	349	250	615						24	180	383	562
TIB-EC125/40-75004	Y2-280S-4	75							399	1129	457	368	280	680							181	544	725
TIB-EC150/40-37004	Y2-225S-4	37	200	150	160		450	286	358	966	356	286	225	560			550	450		19	200	301	501
TIB-EC150/40-45004	Y2-225M-4	45								991		311									200	312	512
TIB-EC150/40-55004	Y2-250M-4	55							377	1056	406	349	250	615						24	203	383	586
TIB-EC150/40-75004	Y2-280S-4	75							399	1131	457	368	280	680							205	544	748
TIB-EC150/40-90004	Y2-280M-4	90								1181		419									205	587	791

Thai Industrial Business Company Limited
Tel. : +66 (0) 65 265 4555 (Hotline) , +66 (0) 2 180 6456
E-mail : sales@tibflow.com

Copyright © Thai Industrial Business Co.,Ltd. All rights reserved.

TIB CLOSE-COUPLED END SUCTION

CENTRIFUGAL PUMP

COMPLETE LIQUID PUMPING SYSTEM SOLUTIONS EXPERTISE

บริษัท ไทยธุรกิจอุตสาหกรรม จำกัด
THAI INDUSTRIAL BUSINESS CO., LTD.

555 อาคารรสา วัน ยูนิตเลขที่ 2203-2 ชั้นที่ 22 ถนนพหลโยธิน
แขวงจตุจักร เขตจตุจักร กรุงเทพมหานคร 10900

555 Rasa One, Unit No. 2203-2, 22 floor Phaholyothin Road,
Chatuchak, Chatuchak, Bangkok 10900 Thailand.

Tel. +66 (0) 65 265 4555 (Hotline) , +66 (0) 2 180 6456

CONTACT US

sales@tibflow.com
www.tibflow.com